Easy! Smooth!

Replacement Guidebook

SP5000 12” Display (PFXSP5600TPD) + Standard Box (PFXSP5B00) → GP6000 Series PFXGP6640TMDI

The 2nd Edition, June 2026

SE01-Guide-SP5600TPD_StandardBox_to_GP6640T-EN-02

*Products may be changed or discontinued without notice. Please check our website for the latest information.

© 2026 Pro-face. All Rights Reserved. |

Pro-face by Schneider Electric

Public

Update History

Date	Edition	Updated Slide	Description
2025/12/08	1st	-	Newly created
2026/06/30	2nd	18, 20	• The version of System Settings is updated For details about System Settings, refer to GP6000 Series System Settings User Guide.
		24, 32	• Expansion units for GP6000 Series Advanced models are released. For details about the expansion units, refer to Expansion Unit Hardware Guide.
		25	• For the latest information on supported standards, please refer to our website.
		33	• VESA mounting plate (P/N: HMIZHVESA) is added as an accessory.

© 2026 Pro-face. All Rights Reserved. |

Public

Legal Information

The information provided in this document contains general descriptions, technical characteristics and/or recommendations related to products/solutions.

This document is not intended as a substitute for a detailed study or operational and site-specific development or schematic plan. It is not to be used for determining suitability or reliability of the products/solutions for specific user applications. It is the duty of any such user to perform or have any professional expert of its choice (integrator, specifier or the like) perform the appropriate and comprehensive risk analysis, evaluation and testing of the products/solutions with respect to the relevant specific application or use thereof.

The Pro-face brand and any trademarks of Schneider Electric SE and its subsidiaries referred to in this document are the property of Schneider Electric SE or its subsidiaries. All other brands may be trademarks of their respective owner.

This document and its content are protected under applicable copyright laws and provided for informative use only. No part of this document may be reproduced or transmitted in any form or by any means (electronic, mechanical, photocopying, recording, or otherwise), for any purpose, without the prior written permission of Schneider Electric.

Schneider Electric does not grant any right or license for commercial use of the document or its content, except for a non-exclusive and personal license to consult it on an "as is" basis.

Schneider Electric reserves the right to make changes or updates with respect to or in the content of this document or the format thereof, at any time without notice.

To the extent permitted by applicable law, no responsibility or liability is assumed by Schneider Electric and its subsidiaries for any errors or omissions in the informational content of this document, as well as any non-intended use or misuse of the content thereof.

Public

Safety Information

Important Information

Read these instructions carefully and look at the equipment to become familiar with the device before trying to install, operate, service, or maintain it. The following special messages may appear throughout this documentation or on the equipment to warn of potential hazards or to call attention to information that clarifies or simplifies a procedure.

The addition of this symbol to a “Danger” or “Warning” safety label indicates that an electrical hazard exists which will result in personal injury if the instructions are not followed.

This is the safety alert symbol. It is used to alert you to potential personal injury hazards. Obey all safety messages that follow this symbol to avoid possible injury or death.

⚠ DANGER
DANGER indicates a hazardous situation which, if not avoided, **will result in** death or serious injury.

⚠ CAUTION
CAUTION indicates a hazardous situation which, if not avoided, **could result** in minor or moderate injury.

⚠ WARNING
WARNING indicates a hazardous situation which, if not avoided, **could result in** death or serious injury.

NOTICE
NOTICE is used to address practices not related to physical injury.

Please Note

Electrical equipment should be installed, operated, serviced, and maintained only by qualified personnel. No responsibility is assumed by Schneider Electric for any consequences arising out of the use of this material.

A qualified person is one who has skills and knowledge related to the construction and operation of electrical equipment and its installation and has received safety training to recognize and avoid the hazards involved.

About this book

Document Scope

This guidebook introduces the procedures to replace a unit from “SP5000 Series PFXSP5600TPD + PFXSP5B00” to “GP6000 Series PFXGP6640TMDI”.
The recommended substitute models are as follows.

Model in use			Recommended substitutes	
SP-5600TP (12” Premium Display) + SP-5B00 (Standard Box)	PFXSP5600TPD + PFXSP5B00	→	GP6000 Series 12” Advanced model	PFXGP6640TMDI

Validity Note

This document is valid for GP6000 Series Advanced Model.

The characteristics of the products described in this document are intended to match the characteristics that are available on www.pro-face.com. As part of our corporate strategy for constant improvement, we may revise the content over time to enhance clarity and accuracy. If you see a difference between the characteristics in this document and the characteristics on www.pro-face.com, consider www.pro-face.com to contain the latest information.

Information on Non-Inclusive or Insensitive Terminology

As a responsible, inclusive company, Schneider Electric is constantly updating its communications and products that contain non-inclusive or insensitive terminology. However, despite these efforts, our content may still contain terms that are deemed inappropriate by some customers.

Trademarks

Product names used in this document may be the registered trademarks owned by the respective proprietors.

© 2026 Pro-face. All Rights Reserved.

Public

About this book

Product Related Information

This product has been designed, developed and manufactured for use in industrial or factory automation systems.

• The product is not appropriate for use with aircraft control devices, medical life-support equipment, central trunk data transmission (communication) devices, or nuclear power control devices, due to inherent requirements for extremely high levels of safety and reliability.

• When using the product with transportation vehicles (trains, cars, and ships),disaster and crime prevention devices, safety equipment, or medical devices unrelated to life-support systems, use redundant and/or failsafe system designs to ensure reliability and safety.

If the equipment is used in a manner not specified by the manufacturer, the protection provided by the equipment may be impaired.

⚠⚠DANGER

HAZARD OF ELECTRIC SHOCK, EXPLOSION, OR ARC FLASH

- Remove all power from the device before removing any covers or elements of the system, and prior to installing or removing any accessories, hardware, or cables.
- Unplug the power cable from both this product and the power supply prior to installing or removing the product.
- Always use a properly rated voltage sensing device to confirm power is off where and when indicated.
- Replace and secure all covers or elements of the system before applying power to this product.
- Use only the specified voltage when operating this product. The DC model is designed to use 12 to 24 Vdc, and the AC model is designed to use 100 to 240 Vac. Always check whether your device is DC or AC powered before applying power.
- When using this product in Class I, Division 2, Groups A, B, C, and D hazardous locations, install this product in an enclosure that prevents the operator from touching the back of this product without the use of tools.

Failure to follow these instructions will result in death or serious injury.

Critical alarm indicators and system functions require independent and redundant protection hardware and/or mechanical interlocks.

Please design a safety circuit external to this product so that the entire system operates safely even if the external power supply or this product fails or malfunctions.

• Interlocks and other circuits designed to interrupt or prevent equipment operation (such as emergency stops, protective circuits, and opposing action circuits) and circuits that prevent machine damage, such as positioning mechanisms, should be constructed external to the product.

• The product stops operation when it detects an abnormality such as a watchdog timer error. If an error occurs in the input/output control area, which cannot be monitored, it may lead to unexpected input/output behavior. Therefore, it is important to configure an external fail-safe circuit or mechanism.

• Problems with the relay or transistor in the output unit may cause the output to remain either in the ON or OFF state. Install an external monitoring circuit for output signals that may cause a serious accident.

Design the circuit so that power is supplied to the external device or load control power supply connected to this product before it starts.

When you cycle power, wait at least 10 seconds after it has been turned off. If this product is restarted too quickly, it may not operate correctly.

Do not create any switches on the touch panel that may cause personal injury, property damage, or compromise the safety of the equipment. Design the system so that controls for important operations are managed by devices other than this product, or by independent hardware switches.

In the event the screen cannot be properly read, for example, if the backlight is not functioning, it may be difficult or impossible to identify a function. Functions that may present a hazard if not immediately executed, such as a fuel shut-off, must be provided independently of this product.

⚠ WARNING

LOSS OF CONTROL

- The designer of any control scheme must consider the potential failure modes of control paths and, for certain critical control functions, provide a means to achieve a safe state during and after a path failure. Examples of critical control functions are emergency stop and overtravel stop, power outage and restart.
- Separate or redundant control paths must be provided for critical control functions.
- System control paths may include communication links. Consideration must be given to the implications of unanticipated transmission delays or failures of the link.
- Observe all accident prevention regulations and local safety guidelines.
- Each implementation of this product must be individually and thoroughly tested for proper operation before being placed into service.
- The machine control system design must take into account the possibility of the backlight no longer functioning and the operator being unable to control the machine, or making errors in the control of the machine.

Failure to follow these instructions can result in death, serious injury, or equipment damage.

About this book

For additional information, refer to NEMA ICS 1.1 (latest edition), "Safety Guidelines for the Application, Installation, and Maintenance of Solid State Control" and to NEMA ICS 7.1 (latest edition), "Safety Standards for Construction and Guide for Selection, Installation and Operation of Adjustable-Speed Drive Systems" or their equivalent governing your particular location.

⚠WARNING

UNINTENDED EQUIPMENT OPERATION

- The application of this product requires expertise in the design and programming of control systems. Only persons with such expertise should be allowed to program, install, alter, and apply this product.
- Do not use this product as the only means of control for critical system functions such as motor start/stop or power control.
- Do not use this equipment as the only notification device for critical alarms, such as device overheating or overcurrent.
- Use only the software provided with this product. If you use other software, please confirm the operation and safety before use.
- Follow all applicable safety standard, local regulations and directives.

Failure to follow these instructions can result in death, serious injury, or equipment damage.

The following characteristics are specific to the LCD panel and are considered normal behavior:

• LCD screen may show unevenness in the brightness of certain images or may appear different when seen from outside the specified viewing angle. Extended shadows, or crosstalk may also appear on the sides of screen images.

• LCD screen pixels may contain black and white colored spots and color display may seem to have changed.

• When experiencing vibrations within a certain frequency range and vibration acceleration is above what is acceptable, the LCD screen may partially turn white. Once the vibration condition ends, the whitening of the screen is resolved.

• When the same image is displayed on the screen for a long period, an afterimage may appear when the image is changed.

• The panel brightness may decrease when used for a long time in an environment continuously filled with inert gas. To prevent deterioration of panel brightness, regularly ventilate the panel. For more information, please contact customer support.
https://www.pro-face.com/trans/en/manual/1015.html

© 2026 Pro-face. All Rights Reserved.

Public

About this book

⚠WARNING

SERIOUS EYE AND SKIN INJURY

The liquid in the LCD panel contains an irritant:

- Avoid direct skin contact with the liquid.
- Wear gloves when you handle a broken or leaking unit.
- Do not use sharp objects or tools in the vicinity of the LCD panel.
- Handle the LCD panel carefully to prevent puncture, bursting, or cracking of the panel material.
- If the panel is damaged and any liquid comes in contact with your skin, immediately rinse the area with running water for at least 15 minutes. If the liquid gets in your eyes, immediately rinse your eyes with running water for at least 15 minutes and consult a doctor.

Failure to follow these instructions can result in death, serious injury, or equipment damage.

NOTICE

REDUCTION OF SERVICE LIFE OF PANEL

Change the screen image periodically and try not to display the same image for a long period of time.

Failure to follow these instructions can result in equipment damage.

Precautions on using models with projected capacitive touch panel

Models with a projected capacitive (PCAP) touch panel may operate abnormally when the display surface is wet.

⚠WARNING

LOSS OF CONTROL

- Do not touch the touch panel area during operating system startup.
- Do not operate when the touch panel surface is wet.
- If the touch panel surface is wet, remove any excess water with a soft cloth before operation.

Failure to follow these instructions can result in death, serious injury, or equipment damage.

NOTE:

• If Touch Mode is set to Water detection mode, when an abnormal touch (such as water) occurs, touch is disabled for a few seconds to avoid accidental touch. Normal touch operation recovers a few seconds after the abnormal touch condition is removed. You can change the Touch Mode in System Settings.

• While the system is starting up, as the touch panel initial values are being checked, do not touch the touch panel area.

© 2026 Pro-face. All Rights Reserved. |

Public

Compared to conventional analog resistive film, projected capacitive touch panels have higher transmittance and lighter touch operation, as well as supporting multitouch. As it is able to detect weak changes in capacitance, projected capacitive touch panels are susceptible to environmental noise.

While our products have been optimized for industrial environmental noise and conform to CE marking, our products cannot support all environmental noise.

Please consider the following in the installation environment to avoid touch malfunction.

Example:

To reduce the noise voltage of the enclosure of the equipment housing this product:

- Implement noise countermeasures in the equipment. For example, install a noise filter on the inverter, servo amplifier, or other equipment. Refer to the manufacturer's instruction manual.
- Attach a ground wire noise filter to the FG connection of equipment.
- Connect the enclosure for the equipment to the building. For example, connect to the concrete or steel reinforcement parts of the building.

  NOTE: If there is a lot of environmental noise, because the noise filter for the touch panel controller has to run, touch response may become slow.

General Cybersecurity Information

In recent years, the growing number of networked machines and production plants has seen a corresponding increase in the potential for cyber threats, such as unauthorized access, data breaches, and operational disruptions. You must, therefore, consider all possible cybersecurity measures to help protect assets and systems against such threats.

To help keep your Pro-face products secure and protected, it is in your best interest to implement the cybersecurity best practices as described in the Cybersecurity Best Practices document.

Pro-face provides additional information and assistance:

- Visit the Security Notification page to find security notifications.
- Contact us to report vulnerabilities and incidents.

Product Related Cybersecurity Information

Refer to Cybersecurity.

© 2026 Pro-face. All Rights Reserved.

Public

Cybersecurity

Cybersecurity Guideline

Use this product inside a secure industrial automation and control system. Total protection of components (equipment/devices), systems, organizations, and networks from cyber attack threats requires multi-layered cyber risk mitigation measures, early detection of incidents, and appropriate response and recovery plans when incidents occur. For more information about cybersecurity, refer to the Pro-face HMI/IPC Cybersecurity Guide.
https://www.proface.com/en/download/manual/cybersecurity_guide

⚠ WARNING

POTENTIAL COMPROMISE OF SYSTEM AVAILABILITY, INTEGRITY, AND CONFIDENTIALITY

- Change default passwords at first use to help prevent unauthorized access to device settings, controls and information.
- Disable unused ports/services and default accounts, where possible, to minimize pathways for malicious attacks.
- Place networked devices behind multiple layers of cyber defenses (such as firewalls, network segmentation, and network intrusion detection and protection).
- Apply the latest updates and hotfixes to your Operating System and software.
- Use cybersecurity best practices (for example: least privilege, separation of duties) to help prevent unauthorized exposure, loss, modification of data and logs, interruption of services, or unintended operation.

Failure to follow these instructions can result in death, serious injury, or equipment damage.

Security Seal

This product has a security seal attached, which helps detect unauthorized repairs or modifications to the product. Once the security seal is removed, the product cannot be used again as it would increase the security risk.

⚠ WARNING

POTENTIAL COMPROMISE OF SYSTEM AVAILABILITY, INTEGRITY, AND CONFIDENTIALITY

- Do not remove the security seal on the product.
- Do not use products with removed security seals.

Failure to follow these instructions can result in death, serious injury, or equipment damage.

© 2026 Pro-face. All Rights Reserved.

Public

Federal Communication Commission Radio Frequency Interference Statement – For USA

FCC Radio Interference Information

This product has been tested and found to comply with the Federal Communications Commission (FCC) limits for a Class A digital device, pursuant to Part 15 of the FCC Rules. These limits are designed to provide reasonable protection against harmful interference in a commercial, industrial or business environment. This product generates, uses, and can radiate radio frequency energy and, if not installed and used in accordance with the instructions, may cause or be subject to interference with radio communications. To minimize the possibility of electromagnetic interference in your application, observe the following two rules:

- Install and operate this product in such a manner that it does not radiate sufficient electromagnetic energy to cause interference in nearby devices.
- Install and test this product to ensure that the electromagnetic energy generated by nearby devices does not interfere with the operation of this product.

⚠ WARNING

ELECTROMAGNETIC / RADIO INTERFERENCE, UNINTENDED EQUIPMENT OPERATION

Check for electromagnetic and radio interference. If interference is detected, take the following actions.

- Increase the distance between this product and the interfering equipment.
- Reorient this product and the interfering equipment.
- Reroute power and communication lines to this product and the interfering equipment.
- Connect this product and the interfering equipment to different power supplies.
- Always use shielded cables when connecting this product to a peripheral device or another computer.

Failure to follow these instructions can result in death, serious injury, or equipment damage.

Changes or modifications not expressly approved by the party responsible for compliance could void the user's authority to operate this product.

© 2026 Pro-face. All Rights Reserved. |

Public

Hazardous Location Installation - For USA and Canada

General

This product is suitable for use in Class I, Division 2, Groups A, B, C, and D hazardous locations or in non-hazardous locations. Before installing or using this product, confirm that the Hazardous Location certification appears on the product labeling.

NOTE: Some products are not yet rated as suitable for use in hazardous locations. Always use your product in conformance with the product labeling and this manual.

⚠⚠DANGER

HAZARD OF ELECTRIC SHOCK, EXPLOSION, OR ARC FLASH

- Remove all power from the device before removing any covers or elements of the system, and prior to installing or removing any accessories, hardware, or cables.
- Unplug the power cable from both this product and the power supply prior to installing or removing the product.
- Always use a properly rated voltage sensing device to confirm power is off where and when indicated.
- Replace and secure all covers or elements of the system before applying power to this product.
- Use only the specified voltage when operating this product. The DC model is designed to use 24 Vdc, and the AC model is designed to use 100 to 240 Vac. Always check whether your device is DC or AC powered before applying power.

Failure to follow these instructions will result in death or serious injury.

⚠WARNING

EXPLOSION HAZARD

- Do not use this product in hazardous environments or locations other than Class I, Division 2, Groups A, B, C, and D.
- Substitution of any components may impair suitability for Class I, Division 2.
- Always confirm the UL 121201 or CSA C22.2 No.213 hazardous location rating of your device before installing or using it in a hazardous location.
- To apply or remove the supply power from this product installed in a Class I, Division 2 hazardous location, you must either: A) Use a switch located outside the hazardous environment, or B) Use a switch certified for Class I, Division 1 operation inside the hazardous area.
- Do not connect or disconnect equipment unless power has been switched off or the area is known to be non-hazardous. This applies to all connections including power, ground, serial, parallel, and network connections.
- Do not install any components, equipment, or accessories manufactured by us or by OEM unless these have also been qualified as suitable for use in Class I, Division 2, Groups A, B, C, and D locations.
- Always use shielded/grounded cables in hazardous locations.
- Use only non-incendive USB devices.
- Do not attempt to install, operate, modify, maintain, service, or otherwise alter this product except as permitted in this manual. Unpermitted actions may impair the suitability of this product for Class I, Division 2 operation.

Failure to follow these instructions can result in death, serious injury, or equipment damage.

Make sure that this product is properly rated for the location. If the intended location does not presently have a Class, Division and Group rating, then users should consult the appropriate authorities having jurisdiction in order to determine the correct rating for that hazardous location.

Hazardous Location Installation - For USA and Canada

Operation and Maintenance

The systems have been designed for compliance with relevant spark ignition tests.

⚠ WARNING

EXPLOSION HAZARD

In addition to the other instructions in this manual, observe the following rules when installing this product in a hazardous location:

- Wire the equipment in accordance with the National Electrical Code article 501.10 (B) for Class I, Division 2 hazardous locations.
- Install this product in an enclosure suitable for the specific application.

Failure to follow these instructions can result in death, serious injury, or equipment damage.

© 2026 Pro-face. All Rights Reserved.

Public

Table of Contents

1	Summary
2	Hardware Section
2-1	Specification Comparison
2-2	Standards Compatibility
2-3	Interface Compatibility
2-4	Installation Method Compatibility
2-5	Option Compatibility
2-6	Other Important Notes on Hardware
3	Software Section
3-1	Replacement Procedure
3-2	Software Compatibility

1. Summary

When replacing from PFXSP5600TPD + PFXSP5B00 to PFXGP6640TMDI, please note the following points.

- The supported interfaces are basically the same, but the locations are different, and the wiring will change significantly. Refer to the 2-3. Interface Compatibility in this document.
- Before replacing the unit, refer to GP-Pro-EX Device/PLC Connection Manual to check the cable connection just in case.
- GP6000 Series Advanced model is supported by GP-Pro EX V5.01.000 or later. For information about the software part, refer to GP-Pro EX Reference Manual.

SP5000 Series

GP6000 Series

© 2026 Pro-face. All Rights Reserved. |

Public

1. Summary

- GP6000 Advanced models have Modular structure (Display and Rear modules) just like SP5000.
- The assembly is done in Plant, so you don't need to assemble by themselves. (Purchase the product by one CR)
- You can replace each unit by themselves when broken. Make sure to purchase a maintenance part of the same display size to keep certifications.

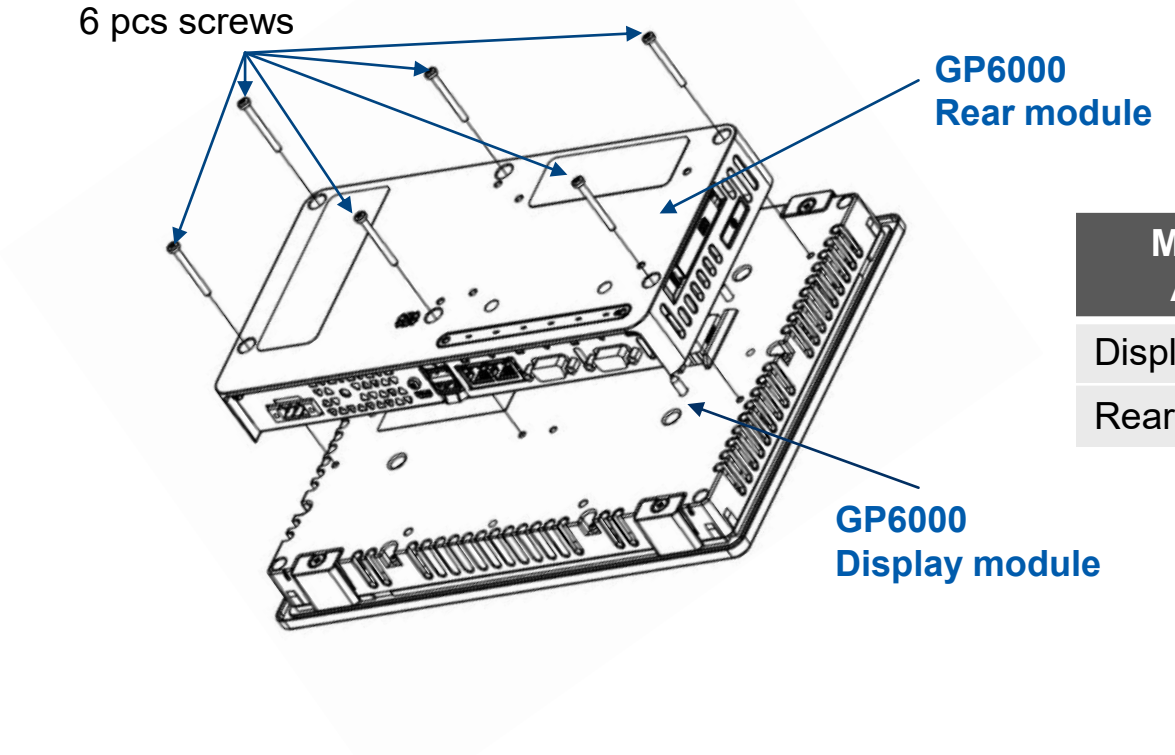

Maintenance Accessory	Product Number	Description
Display module 12.1	PFXDM6600TM	12-inch Display Module
Rear module (DC)	PFXGP6Z40DI	BOX module for maintenance, DC

NOTE: During the free warranty period, return both the Display and Rear modules together as a set for repair. If only the display or rear module is returned and replaced, the other component will not be covered by the extended warranty. As a result, the warranty periods for the display and rear modules may differ.

1. Summary

- Out-of-box experience is different between SP5000 Series and GP6000 Series.
  In the case of SP5000 Series, after power on the product, Welcome screen is displayed.
  In the case of GP6000 Series, after power on the product, the Create Account screen is displayed.
- Create an administrator user account for the System Settings. Enter the username and password, then touch the Register button. The screen goes to the Welcome screen.

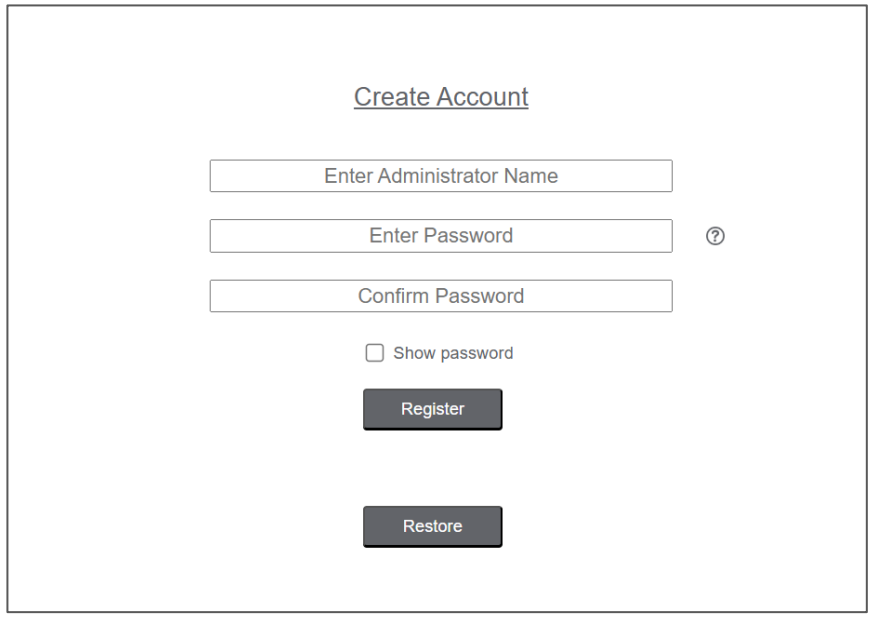

NOTE: Password setting is a Cyber Security requirement.
NOTE: Depending on the system settings version, the “Not Use Password” option and the “Skip” button may be available.
Although the product can be operated without a password, we strongly recommend using one for security reasons.

1. Summary

- GP6000 Series Advanced model is equipped with System Settings separate from offline mode. In the System Settings, you can configure the product's hardware configuration and network settings such as IP addresses.
- The following configurations are done in the System Settings, not in offline mode.
  Main Unit – Ethernet settings
  Maintenance Menu – Calibrate Touch Panel
- Memory loader function in Transfer Tool is not supported by GP6000 Series. You can perform backup or restore data in the System Settings.
- For more information about the System Settings, refer to [GP6000 Series System Settings User Guide](#).

Example: IP address setting

SP5000

Offline Screen

GP6000

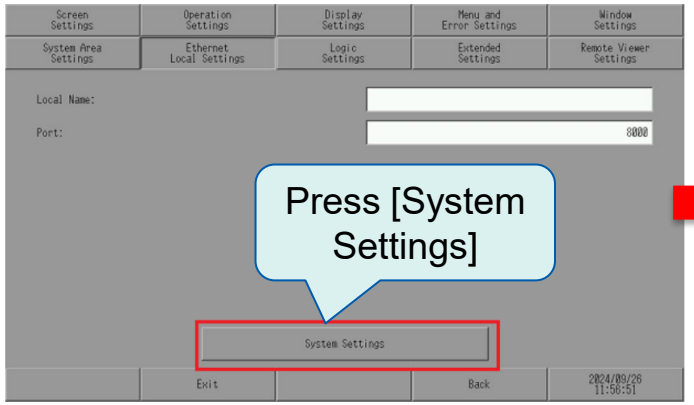

Offline Screen

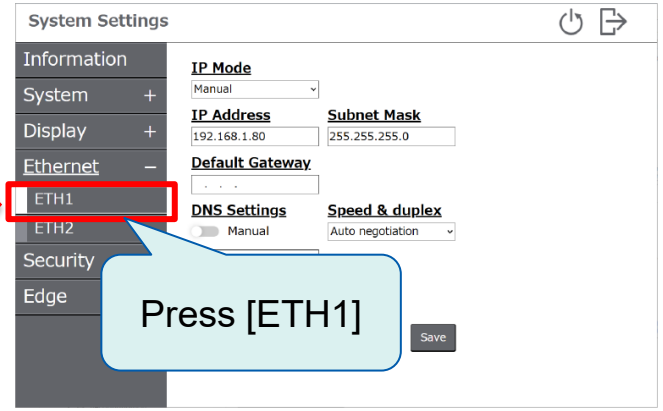

System Settings

1. Summary

These functions are available in the System Settings.

Menu		Description
Information	-	Displays the system status, version information, etc.
System	System monitor	Displays the number of times this product has been started, the total operating time, the temperature inside the product, etc. This also exports the system settings operation log.
	Date and Time	Set the product's internal clock.
	Language	Select the user interface language for the system settings.
	Factory Reset *1	Resets the product to the state it was in when it was purchased.
	Backup Restore *1	Back up the data in the product to a USB storage device and use the backup file to restore the product.
	Recovery *1*4	If the HMI runtime does not work properly, use this command to reboot the product and enter recovery mode.
Display*3	Display1	Configure display settings such as brightness and touch areas.
Ethernet *1	ETH1/ETH2	Configure the Ethernet settings.
Security	Password	Change the login password.
	User Account *1*2	Register or delete standard user account separate from the account with administrator privileges.
	Firewall *1	Configure settings related to the firewall.
	IP Forwarding *1*6	Received IP packets are forwarded to the appropriate interface based on the destination information, which enables communication between different networks.
	External Access *1*5	Set whether to allow remote access to system settings.
SiteManager *1	-	Configure SiteManager to remotely access this product using Pro-face Connect.

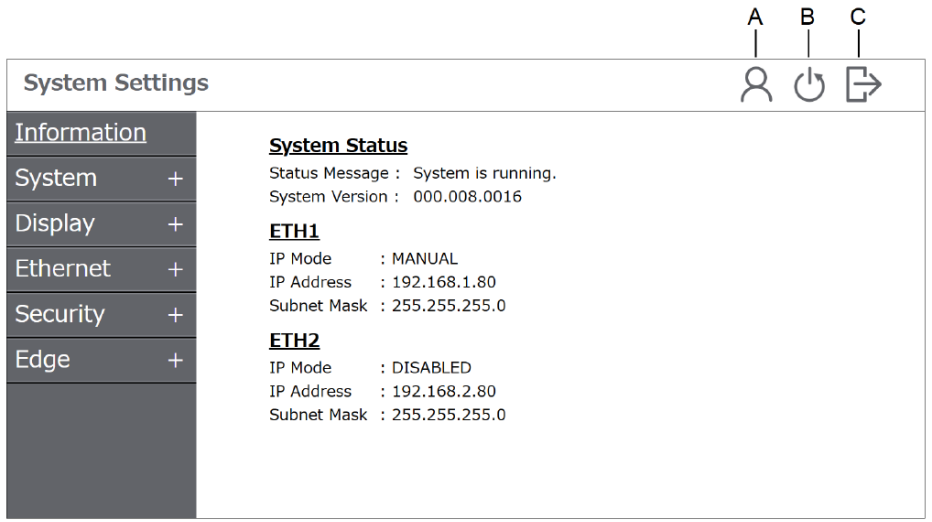

	Function	Description
A	Switching accounts	Switch user accounts. This function is displayed if you have a standard user account in addition to the administrator account.
B	Reboot	Reboot the product.
C	Logout	Log out of the system settings and return to the previous screen.

NOTE: For more information about System Settings, refer to GP6000 Series System Settings User Guide.

*1 Displays only if you are logged in with an administrator account. *2 If password authentication is not used, this setting is not displayed. *3 For the DIN mount type of the GP6000 Series Advanced Model, this menu is displayed only when an expansion display is connected to the Type-C interface. *4 This function is available only when your screen editing software supports it. *5 This menu item appears on DIN mount types of the GP6000 Series Advanced Model only. *6 This menu item appears on the GP6000 Series Advanced Model only.

1. Summary

The model number of GP6000 Series Advanced Model partly differs depending on a specification.
Before placing an order, please make sure of the model number.

Digit position												
1	2	3	4	5	6	7	8	9	10	11	12	13 and later
						(display size)	(type)		(LCD)	(touch panel)	(power supply)	(supported software, others)
PFX			GP6			5: 10"	40: Advanced		T: TFT	C: Multi (PCAP)	A: AC	I: GP-Pro EX
						6: 12"			W: Wide TFT	M: Analog (multi-touch)	D: DC	
						7: 15"			(none): No display (DIN mount type)	(none): No display (DIN mount type)		
						8: 19"						
						9: 22”						
						B: No display (DIN mount type)						

© 2026 Pro-face. All Rights Reserved. |

Public

2. Hardware Section

© 2026 Pro-face. All Rights Reserved. |

Public

2-1. Specification Comparison

		PFXSP5600TPD + PFXSP5B00	PFXGP6640TMDI	Points to note when replacing
Display type		TFT color LCD		
Display size		12.1”		
Resolution		1,024 x 768 pixels (XGA)		
Display colors		16 million colors		GP6000 supports blink function
Backlight		White LED (not replaceable)		
Backlight service life		50,000 hours or more (continuous operation at 25°C before backlight brightness decreases to 50%)		
Touch panel type		Resistive film (analog, two-point touch)		
Touch panel service life		1 million times or more		
Memory	Application memory	FLASH EPROM 64MB	eMMC Flash 128MB	
	Backup memory	NVRAM 320KB	NVRAM 320KB	
Battery (clock data backup)		No need to use battery. PFXSP5B00 uses a supercapacitor (electric double-layer capacitor) for clock data backup.	Lithium metal battery (primary battery, replaceable) Battery life: 5 years (approximate)	
Rated input voltage		12…24 Vdc		
Power Consumption		38.5W or less	45W or less (when power is supplied to expansion units) 26W or less (when power is not supplied to expansion units)	
Environmental Spec		Operating Temp: 0-60°C, Storage Temp: -20-60°C		

© 2026 Pro-face. All Rights Reserved. |

Public

2-1. Specification Comparison

		PFXSP5600TPD + PFXSP5B00	PFXGP6640TMDI	Points to note when replacing
Serial Interface	COM1	RS-232C (D-Sub 9pin Plug)		
	COM2	RS-422/485 (D-Sub 9pin Plug)		
Ethernet Interface		10BASE-T/100BASE-TX (RJ-45) x 2	10BASE-T/100BASE-TX/1000BASE-T (RJ-45) x 2 *1*2	
SD Card Interface		SD Card slot x 1 (maximum 32GB SD/SDHC Card)	SD Card slot x 1 (SD/SDHC/SDXC, UHS-I supported)	
USB Interface	Type-A	USB 2.0 x 3 (1 on display, 2 on box) - USB transfer cable (CA3-USBCB-01)	USB 2.0 x 3 (1 on display*3, 2 on box)	No screen data transfer via Type-A
	mini-B	USB 2.0 x 2 (1 on display, 1 on box) - USB transfer cable (ZC9USCBMB1)	-	USB I/F changed from USB mini-B to micro-B
	micro-B	-	USB 2.0 x 2 (1 on display*3, 1 on box) - USB transfer cable (PFXZUSCBMB2) or commercial USB micro-B transfer cable	
Expansion Unit Slot		-	Up to 2 expansion units (option)*4	
Sound Output		-	with AUX interface expansion unit (option)	
AUX Output		-	with AUX interface expansion unit (option)	
Structure*5		When using a factory-installed front USB cover: IP65F, IP67F, Type 1 When using a front USB cover with screw (P/N: PFXZCDCVUS1): IP66F, IP67F, Type 1, Type 4X (Indoor Use Only), Type 13	When using a factory-installed front USB cover: IP65F, IP67F, UL 50/50E, Type 1 When using a front USB cover with screw (P/N: PFXZCDCVUS1): IP66F, IP67F, UL 50/50E, Type 1, Type 4X (Indoor Use Only), Type 12, Type 13	
External dimensions		W315 x H241 x D67 mm	W315 x H241 x D64*6 mm	Slightly different in Depth
Panel cut dimensions		W301.5 x H227.5 mm		

*1 The factory default for the ETH2 port is disabled. Use the System Settings to change it. *2 For 1000BASE-T communication, use twisted pair Ethernet cables with a rating of category 5e or higher.
*3 The factory default for the Front USB ports (Type-A and micro-B) is disabled. *4 Except for the backup memory expansion unit, only one unit of each type can be connected to the main unit.
*5 On the front panel when properly installed in an enclosure and not using the front panel USB port. *6 The depth increases when expansion unit(s) are attached.

2-2. Standards Compatibility

Certification	PFXSP5600TPD + PFXSP5B00	PFXGP6640TMDI
CE (EN61000-6-4, EN61000-6-2, EN61131-2)	✓	✓
UKCA	✓	✓
UL/cUL	✓ (UL61010-2-201) (CSA C22.2 No.61010-2-201)	✓ (UL61010-2-201) (CSA C22.2 No.61010-2-201)
UL/cUL Class 1, Div. 2	✓ (ANSI/ISA12.12.01) (CSA C22.2 No213)	✓ (UL121201) (CSA C22.2 No213)
ATEX (Zones 2/22, equipment category 3 Gas Dust)	✓	✓*1
IECEx (Zones 2/22, equipment category 3 Gas Dust)	✓	✓*1
UKEX	✓	✓*1
KCs	-	✓*1
NEPSI → CCC-Ex	-	✓*1
RCM (C-Tick)	✓	✓
EAC (GOST-R)	✓	-
RoHS for EU	✓	✓
RoHS for China	✓	✓
REACH	✓	✓
CCC *apply for CCC exemption	-	-
KC	✓	✓
Marine (DNV, ABS, LR, BV, NK, RINA, CCS)	-	✓*1 (DNV, NK, EU RO MR)
WEEE	✓	✓

*1 For the latest information, please refer to our website.

2-3. Interface Compatibility

PFXSP5600TPD (Premium Display)

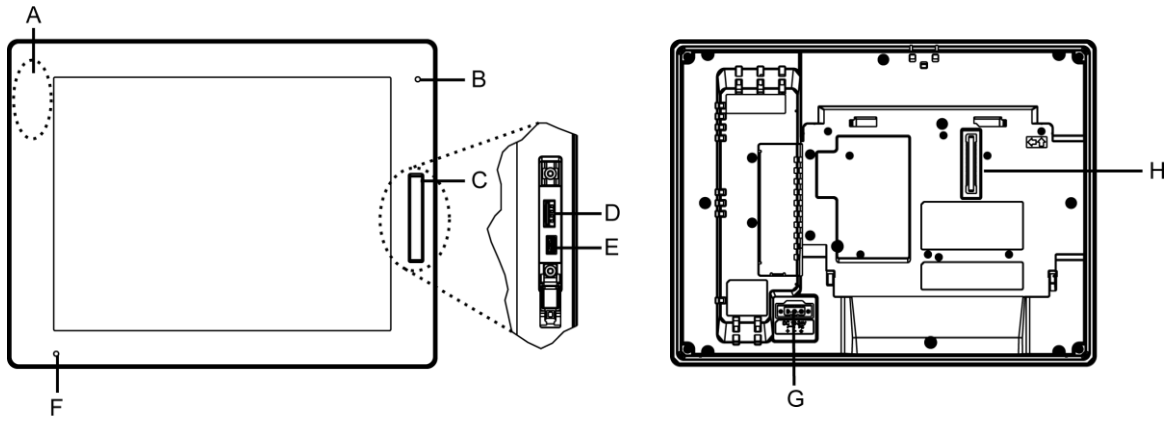

Part	Name
A	N/A for this model
B	Brightness Sensor
C	Front USB Cover
D	USB (Type-A) Interface
E	USB (mini-B) Interface
F	Status LED
G	Power Plug Connector
H	Box Module Interface

SP-5B00 (Standard Box)

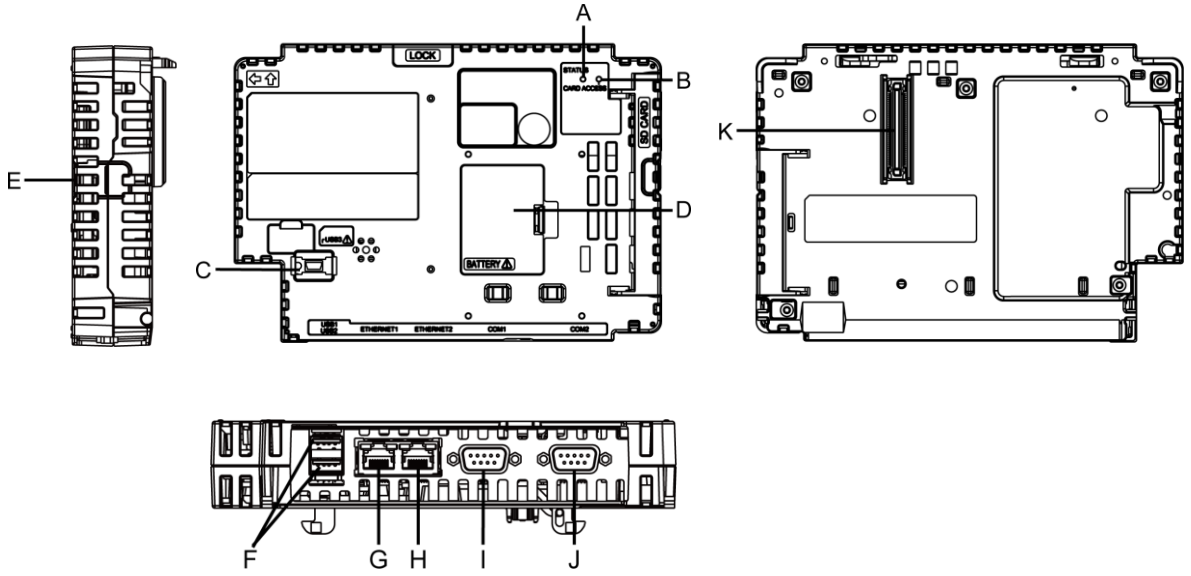

Part	Name
A	Status LED
B	Card Access LED
C	USB (mini-B) Interface
D	Expansion Unit Interface Cover (EXT)
E	Storage Card Cover
F	USB (Type-A) Interface
G	Ethernet Interface (Ethernet1)
H	Ethernet Interface (Ethernet2)
I	Serial Interface (COM1)
J	Serial Interface (COM2)
K	Display Module Interface

2-3. Interface Compatibility

PFXGP6640TMDI

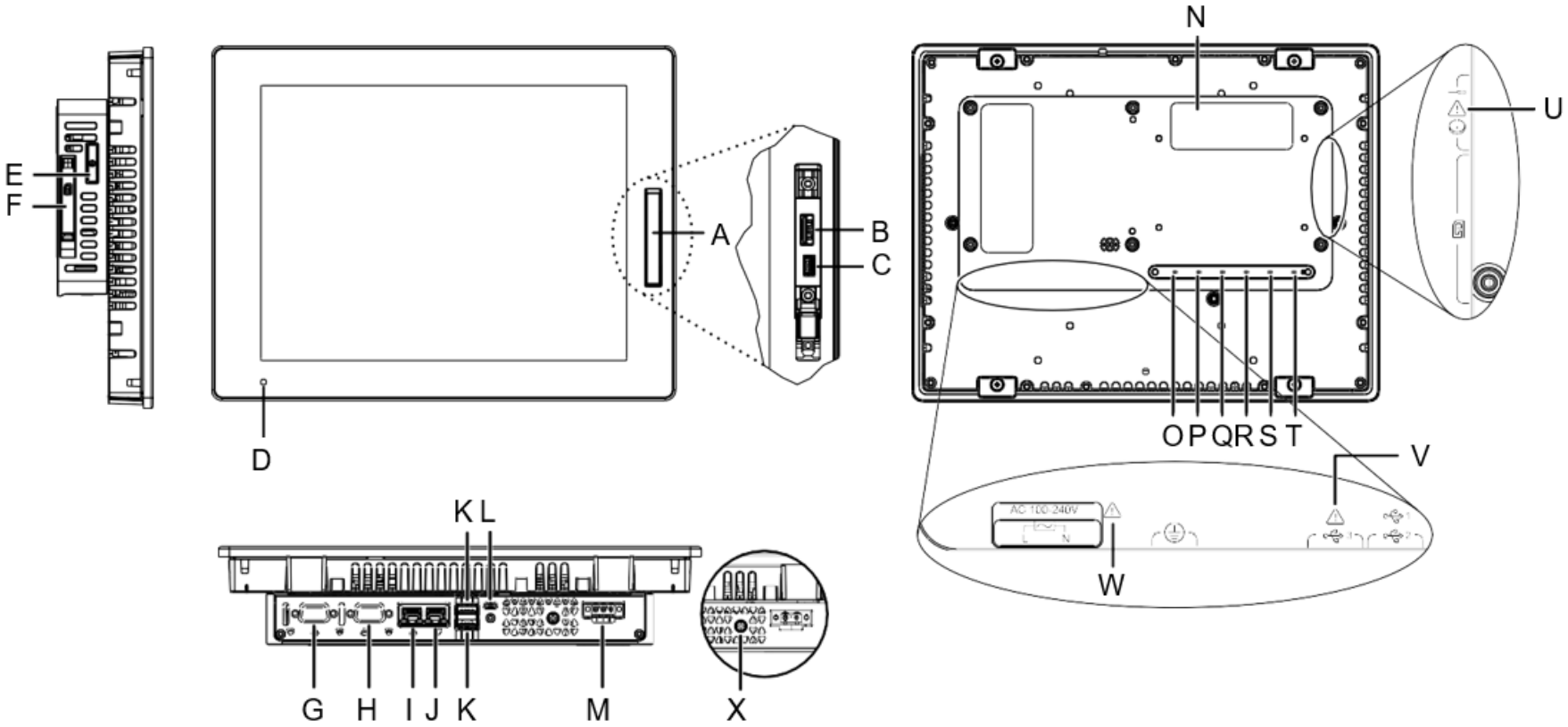

Part	Name
A	Front USB cover
B	Front USB (Type-A) interface
C	Front USB (micro-B) interface
D	Status LED (front LED)
E	Battery slot
F	SD card slot cover
G	Serial interface (COM2)
H	Serial interface (COM1)
I	Ethernet interface (ETH2)
J	Ethernet interface (ETH1)
K	USB (Type-A) interface (x 2)
L	USB (micro-B) interface
M	Power connector
N	Expansion unit interface
O	Status LED (STA)
P	Error LED (ERR)
Q	COM1 LED (COM1)
R	COM2 LED (COM2)
S	USB storage LED (USB)
T	SD card access LED (SD)
U	Safety alert symbol
V	Safety alert symbol
W	Safety alert symbol (AC model only)*
X	PE terminal (used for AC model only)*

*not equipped in this model

NOTE: Please be careful when replacing, as the wiring will change significantly.
Please check GP6000 Series Advanced Model User Guide for details such as interface specifications and pin assignments.

2-4. Installation Method Compatibility

Panel Cut Dimensions are the same between SP5000 and GP6000 12-inch models.

PFXSP5600TPD + PFXSP5B00

Using a Phillips screwdriver, gradually tighten (turn clockwise) the screws for the fasteners (top, bottom, left, and right), alternating diagonally between screws until all are secure. Be sure that the L-shaped part of the installation fastener is completely vertical.
The necessary torque is 0.5 N•m).

Number of Installation Fasteners: Top x2, Bottom x2

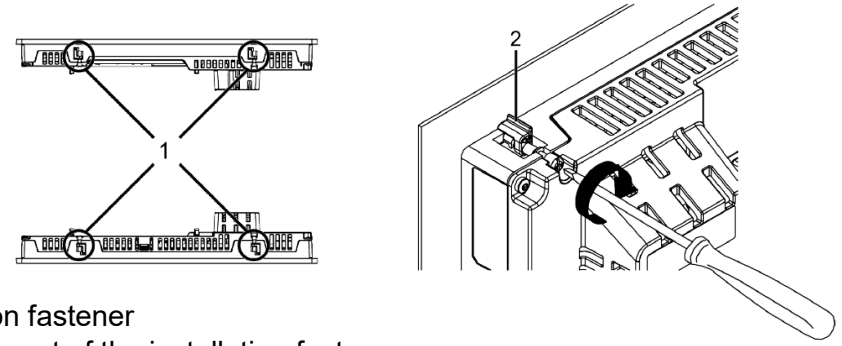

1 Installation fastener
2 L-shaped part of the installation fastener

■ Panel Cut Dimensions

A: 301.5 mm (+1/-0 mm)
B: 227.5 mm (+1/-0 mm)
C: 1.6…5 mm
R: 3 mm maximum

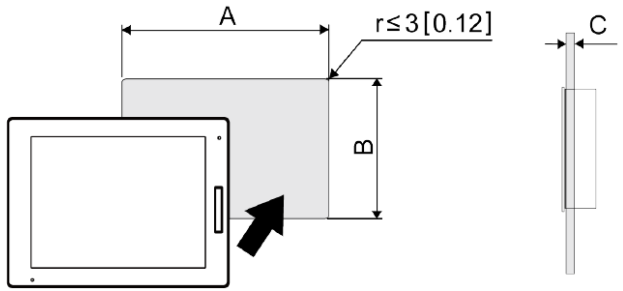

PFXGP6640TMDI

Insert the installation fasteners into the bracket openings at the top, bottom, left and right, and tighten the M4 screws little by little, alternating between diagonally-positioned screws.
The necessary torque is 0.7 N•m.

Number of Installation Fasteners: Top x2, Bottom x2

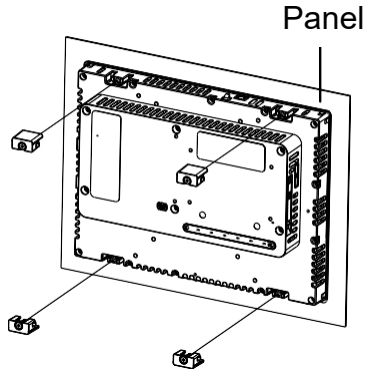

■ Panel Cut Dimensions

A: 301.5 mm (+1/-0 mm)
B: 227.5 mm (+1/-0 mm)
C: 1.6…5 mm
R: 3 mm maximum

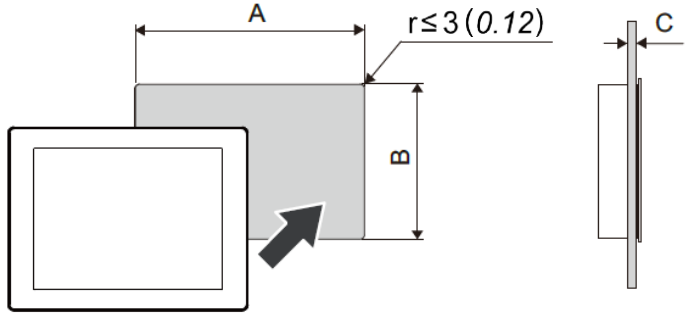

mm (*in*)

NOTE: Please check GP6000 Series Advanced Model Hardware Guide for installation requirements and procedure.

2-5. Option Compatibility – Serial Interface

Product Name	Product Number (Pro-face CR)		Description	Compatibility
	PFXSP5600TPD + PFXSP5B00	PFXGP6640TMDI		
RS-232C 9-pin/25-pin Conversion Cable (0.2m)	PFXZC3CBCVR21 (CA3-CBLCBT232-01)		Cable for converting a D-Sub 9-pin plug to a D-Sub 25-pin socket	✔
RS-422C 9-pin/25-pin Conversion Cable (0.2m)	PFXZCBCBCVR41		Cable for converting a D-Sub 9-pin plug to a D-Sub 25-pin socket	✔
COM Port Conversion Adapter	PFXZC3ADCM1 (CA3-ADPCOM-01)		Connects optional RS-422 communication items to serial interface.	✔
RS-422 Terminal Block Conversion Adapter	PFXZCBADTM1		Connects output from a serial interface (D-sub 9 pin plug) directly to an RS-422 terminal block.	✔
Terminal Block Conversion Adapter	-	PFXZC3ADR41	Connects output from a serial interface with an RS-422 terminal block.	**NEW**
RS-232C Isolation Unit	PFXZC3ADISR21 (CA3-ISO232-01)		Connects a host controller to this product and provides isolation (RS-232C and RS-422 are switchable).	✔

NOTE:
- For host controllers and connection cables, refer to the corresponding device driver manual of your screen editing software.
- Products may be changed or discontinued without notice. Please check our website for the latest information.

2-5. Option Compatibility – USB (Type-A) Interface

Product Name	Product Number (Pro-face CR)		Description	Compatibility
	PFXSP5600TPD + PFXSP5B00	PFXGP6640TMDI		
USB Transfer Cable (2m) *1	PFXZC3CBUSA1 (CA3-USBCB-01)	-	Cable for transferring screen data between a PC (USB Type-A) and this product (USB Type-A)	No *USB A to A screen transfer is not supported.
USB Cable (5m)	PFXZC0CBUS1 (FP-US00)	-	Connects a USB printer (Type-B)	No *2
USB Front Cable (1m)	PFXZC5CBUBEX1 (CA5-USBEXT-01)		Extension cable that attaches USB interface (Type-A) to front panel	✔
USB-Serial (RS-232C) Conversion Cable (0.5m)	PFXZC6CBCVUSR21 (CA6-USB232-01)	-	Cable for converting a USB interface into a serial interface (RS-232C)	No *2
USB/RS-422/485 Conversion Adapter	PFXZCBCBCVUSR41	-	Adapter for connecting this product (USB Type-A) to an external device (RS-422/RS-485)	No *2
EZ Illuminated Switch	PFXZCCEUSG1	-	A unit of 5 illuminated switches with multiple color LED easily connected with this product unit via USB	No *2
EZ Fingerprint Recognition Unit	PFXZCCEUSS1	-	Fingerprint recognition unit connected to this product via USB *End of sale	Not supported due to end of sale
EZ Numpad	PFXZCCEUKB1	-	Numpad connected to this product via USB *End of sale	
EZ Tower Light tube mounting with fixing plate	PFXZCETWHA1	-	USB Connection Type Monolithic EZ Tower Light tube mounting with fixing plate 3 tiers, Ø60, lighting and flashing with a buzzer	No *2
EZ Tower Light with base mounting	PFXZCETWW1	-	USB Connection Type Monolithic EZ Tower with base mounting 3 tiers, Ø60, lighting and flashing with a buzzer	No *2

*1 You can connect using just one of the available USB (Type-A/mini-B) interfaces.
*2 They are not supported by GP-Pro EX yet (Schedule: TBD)
NOTE: Products may be changed or discontinued without notice. Please check our website for the latest information.

2-5. Option Compatibility – USB (mini-B) / USB (micro-B) / SD Card Interface

Product Name	Product Number (Pro-face CR)		Description	Compatibility
	PFXSP5600TPD + PFXSP5B00	PFXGP6640TMDI		
USB Transfer Cable (USB Type A/mini-B) (1.8 m) *1	PFXZC9USCBMB1 (ZC9USCBMB1)	-	Cable for transferring screen data from a PC (USB Type-A) to the GP unit (USB mini-B).	No
USB Panel-mount Extension Cable (USB mini-B) (1 m)	PFXZC9USEXMB1 (ZC9USEXMB1)	-	Extension cable that attaches to the USB (mini-B) interface on the front side of the operation panel.	No
USB Clamp mini-B (1 port)	PFXZC9USCLMB1 (ZC9USCLMB1)	-	Clamp to prevent disconnection of USB cable (USB/mini-B, 1 port, 5 clamps/set)	No
USB Transfer Cable	-	PFXZUSCBMB2	Cable for transferring screen data from a PC (USB Type-A) to this product (USB micro-B)	**NEW**
USB (micro-B) Front Cable	-	PFXZCIEXMB2	Extension cable that attaches USB interface (micro-B) to front panel	**NEW**

Product Name	Product Number (Pro-face CR)		Description	Compatibility
	PFXSP5600TPD + PFXSP5B00	PFXGP6640TMDI		
SD Memory Card	PFXZCBSD4GC41		SD memory card (4 GB), SDHC	✔
SD Memory Card	-	PFXZCSD16GC101	SD memory card (16 GB, pSLC), SDHC	**NEW**
SD Memory Card	-	PFXZCSD32GC101	SD memory card (32 GB, pSLC), SDHC	**NEW**
SD Memory Card	-	PFXYP6SD64GCX	SD memory card (64 GB), SDXC	**NEW**

*1 You can connect using just one of the available USB (Type-A/mini-B) interfaces.
NOTE: Products may be changed or discontinued without notice. Please check our website for the latest information.

2-5. Option Compatibility – Expansion Unit Interface

Product Name	Product Number (Pro-face CR)		Description	Compatibility
	PFXSP5600TPD + PFXSP5B00	PFXGP6640TMDI		
Serial Interface Expansion Unit	-	PFXZHMUSIO1	Module for expanding the serial interface to this product. RS-232C/422/485 x 1 (D-Sub 9 pin plug), RS-485 isolation x 1 (D-Sub 9 pin socket).	**NEW**
Ethernet Interface Expansion Unit	-	PFXZHETH1	Module for expanding the Ethernet interface. Switching hub, 4-port.	**NEW**
AUX Interface Expansion Unit	-	PFXZHMUAUX1	AUX interface module. AUX connector (1 piece) is included.	**NEW**
Backup Memory Expansion Unit	-	PFXZHMUEM1	Module for adding up to 2 MB of backup memory.	**NEW**

NOTE: Products may be changed or discontinued without notice. Please check our website for the latest information.

2-5. Option Compatibility – Others

Product Name	Product Number (Pro-face CR)		Description	Compatibility
	PFXSP5600TPD + PFXSP5B00	PFXGP6640TMDI		
DC Power Supply Adapter for Box Module	PFXZCDADEXP1	-	DIN rail mount 24 Vdc power supply adapter that attaches to the side of Box Module when Box Module and Display Module are located separately.	No
Screen Protection Sheet	PFXZC7DS121 (CA7-DFS12-01)		Prevents reflections, dirt-resistant sheet for the screen (5 sheets/set)	✔
UV Protection Sheet	PFXZCFUV121	-	Sheet to protect the display from dirt and ultraviolet light (1 piece)	No
Environment Cover	PFXZCDOP121		Environmental resistant cover for the display (1 piece)	✔
Enhanced Front USB Cover (With Screw)	PFXZCDCVUS1		Front USB cover with fixing screw, corresponding to IP66F, IP67F, Type 1/4X Indoor Use Only/13 or ATEX certifications (5 pieces/set)	✔
Battery for Memory Backup	PFXZCBBT1	*1	Primary battery for time data backup (1 piece)	No
DC Power Supply Connector with fixable screws	PFXZC7CNACL1 (CA7-ACCNL-01)	-	Connector to connect DC power supply cables (5 pieces/set)	No
DC Power Supply Connector with fixable screws (Angle type)	PFXZCHCNDC3	-	Connector with fixable screws to connect DC power supply cables (Angle type, 5 pieces/set)	No
VESA Mounting Plate	-	HMIZHVESA	VESA mounting bracket	**NEW**

*1 The battery can be replaced for GP6000, but it is not available as a maintenance option. Please use the BR2032 (manufactured by Panasonic Corporation) battery as a replacement.
NOTE: Products may be changed or discontinued without notice. Please check our website for the latest information.

2-5. Option Compatibility – Maintenance options

Product Name	Product Number (Pro-face CR)		Description	Compatibility
	PFXSP5600TPD + PFXSP5B00	PFXGP6640TMDI		
Box Module (DC)	-	PFXGP6Z40DI	Box module (DC model) for GP6000 Series Advanced Model (panel mount type)	**NEW**
12-inch Display Module	-	PFXDM6600TM	12-inch display module with front USB port, XGA, 16 M colors, analog multitouch.	**NEW**
Installation Fastener	-	PFXZCAF1	Fastener for installing the product into a solid panel (4 pieces/set)	**NEW**
Installation Gasket	PFXZCDWG121		Provides dust and moisture resistance when the product is installed into a solid panel (1 piece).	✔
USB Clamp Type-A (1 port)	PFXZCBCLUSA1		Clamp to prevent disconnection of USB cable (USB/A, 1 port, 5 clamps/set)	✔
DC Power Supply Connector	PFXZCBCNDC1	-	Connector to connect DC power supply cables	No
DC Power Supply Connector (Right-angle)	PFXZCBCNDC2	-	Right-angle connector to connect DC power supply cables (5 pcs/set)	No
DC Power Connector	-	PFXZC7CNACL1	Connector with fixable screws to connect DC power supply cables (Straight type, 5 pieces/set).	**NEW**
AUX Connector	PFXZCDCNAUX1		AUX connector required in case an external output is used (5 pieces/set).	✔

NOTE: Products may be changed or discontinued without notice. Please check our website for the latest information.

2-6. Other Important Notes on Hardware

- Do not expose the hardware to direct sunlight.
- This product is not designed for outdoor use. UL certification obtained is for indoor use only.
- Do not turn on the hardware if condensation has occurred inside the device.
- The panel brightness may decrease when used for a long time in an environment continuously filled with inert gas. Please ventilate the control panel periodically.

© 2026 Pro-face. All Rights Reserved. |

Public

3. Software Section

© 2026 Pro-face. All Rights Reserved. |

Public

3-1. Replacement Procedure – Workflow

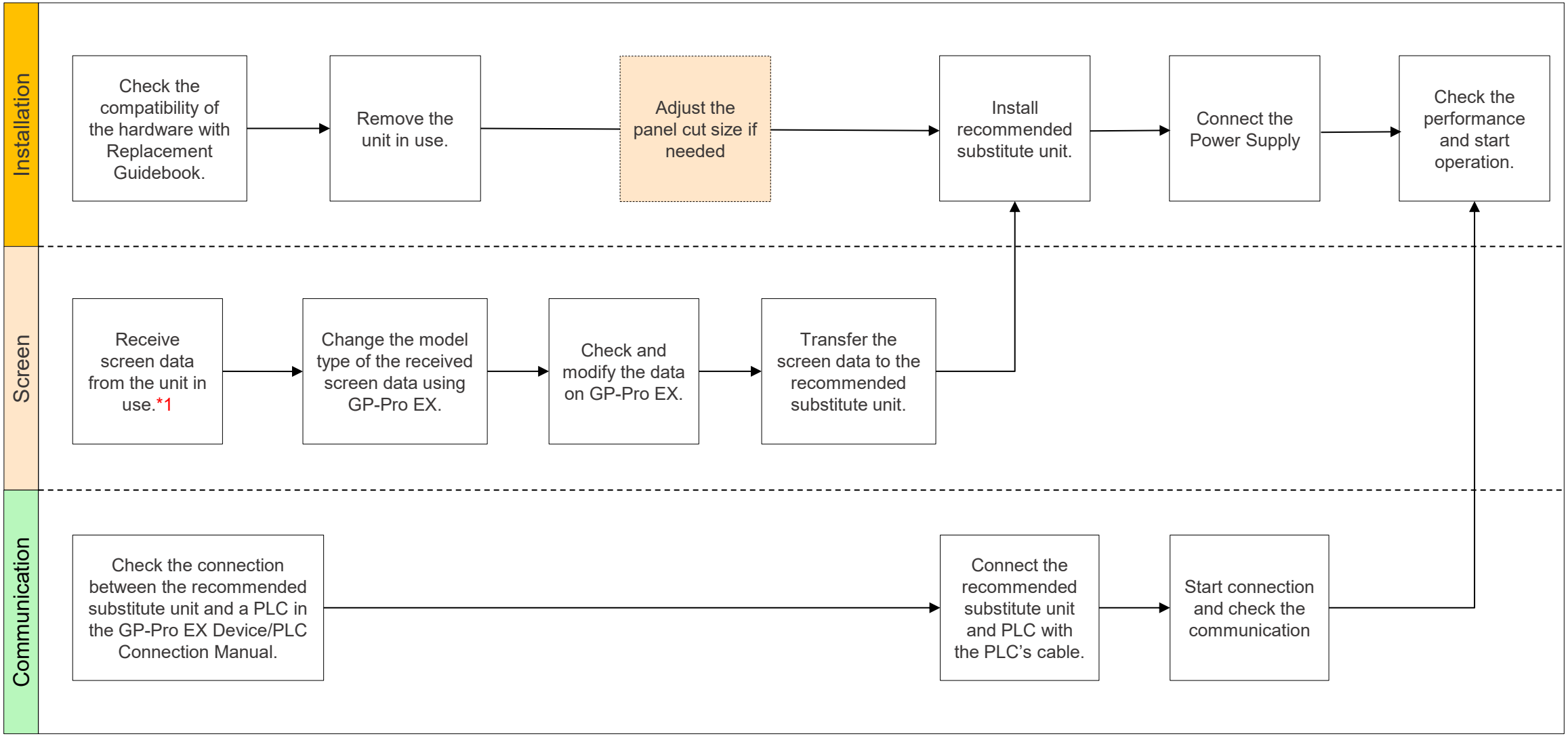

*1: This step is required if screen data is saved only in the GP unit, not in any other device.

3-1. Replacement Procedure – Preparation

Requirements for receiving screen data from the unit in use *1	PC in which GP-Pro EX Transfer Tool is installed. *2
	Transfer Cable (the followings can be used) USB transfer cable: PFXZC3CBUSA1 USB transfer cable: PFXZC9USCBMB1 (Type-A – Type mini-B) or commercial type *It's also possible to send/receive a screen via SD card, USB storage device or Ethernet.
Requirements for converting screen data of the unit in use and transferring the converted data to Recommended substitute unit	PC with GP-Pro EX installed GP6000 Series Advance models supported version: V5.01.000 or later Expansion units (option) supported version: V5.02.000 or later NOTE: If you are using GP-Pro EX V4.x or an earlier version, a separate purchase of a V5.x software license is required.
	Transfer Cable (the followings can be used) USB transfer cable: PFXZUSCBMB2 (Type-A – Type micro-B) or commercial type *It's also possible to send/receive a screen via Ethernet.

*1: This step is required if screen data is saved only in the HMI unit, not in any other device.
If you already have the screen data backup, please go to "3-1. Replacement Procedure – Change model to recommended substitute unit (GP-Pro EX)".

*2: Please use the same or later version of the software used when creating screens on the old model. If you don't know the software version, we recommend that you use the latest one. You can download the latest transfer tool from our website.
https://www.pro-face.com

© 2026 Pro-face. All Rights Reserved. |

Public

3-1. Replacement Procedure – Receive Screen data from the model in use (GP-Pro EX)

In this section, we will introduce how to receive screen data with a USB transfer cable as an example. If you have the backup of screen data, this step is not necessary. Please go to the next section.

1. Connect your PC and the model in use with a USB transfer cable. If the driver of the cable has not been installed on your PC yet, a dialog box will appear. Please follow the instructions.

2. Start the Transfer Tool of GP-Pro EX.

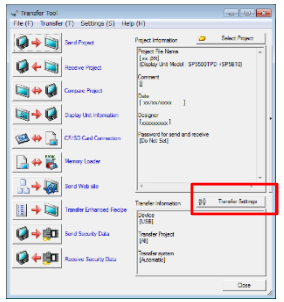

3. Make sure that the [Device] in the “Transfer Settings Information” is set to [USB]. If not, click the [Transfer Setting] button to open the “Transfer Setting” dialog box. Select [USB] in the Communication Port Settings field and click [OK].

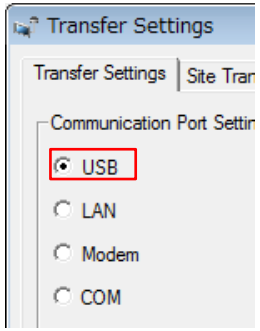

4. Start GP-Pro EX Transfer Tool and click the [Receive Project] button.

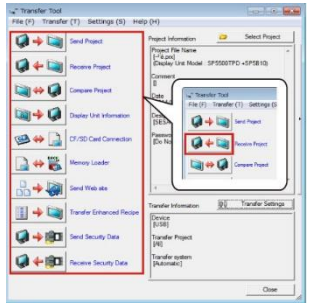

5. Click [Receive Project], and the following dialog box will appear. Specify a place to save the received data in and a project file name, and then click [Save] to start transfer.

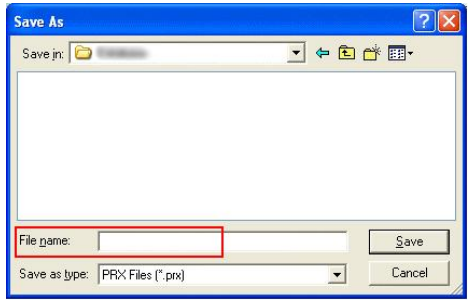

6. The following dialog box appears during transfer, and you can check the communication status. (The display unit enters the Transferring mode and communication with the device such as a PLC is terminated.)

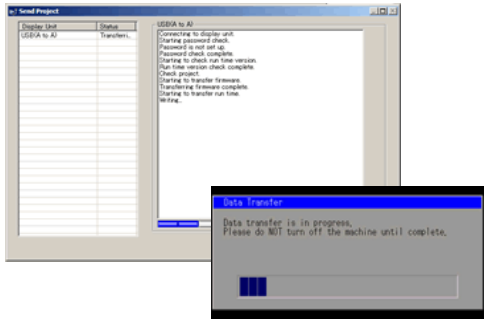

7. When transfer is completed, the status displayed in the dialog box will change from [Transferring] to [Complete Transfer]. Click [Close] to close the dialog box.

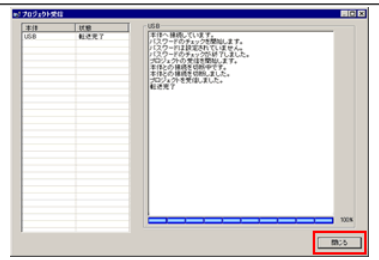

8. Close the Transfer Tool.

3-1. Replacement Procedure – Receive Screen data from the model in use (GP-Pro EX)

NOTES

- The “Hardware Installation” dialog box as shown on the right may appear during installing the USB driver depending on the security level of Windows®. Click [Continue Anyway] to start installing the driver. When installation is completed, click [Finish].

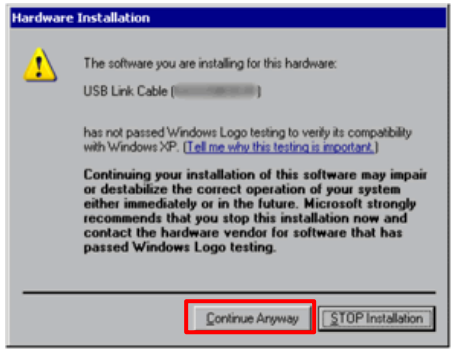

- When the file already exists, a window will appear asking if you want to overwrite the file.

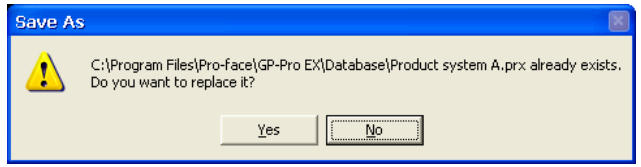

- When receiving a project file that uses SD card/USB memory data such as Recipe Function (CSV data), the following dialog box will appear during the transfer. Please specify where to save the data. Click [OK] to return to the [Receive Project] dialog box and complete the transfer.

© 2026 Pro-face. All Rights Reserved. |

Public

3-1. Replacement Procedure – Change model to recommended substitute unit (GP-Pro EX)

(example)

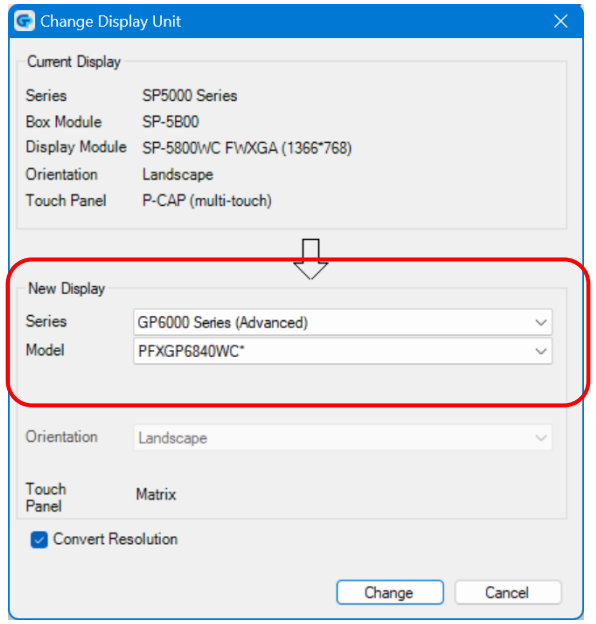

Change the Display unit from SP5000 Series to GP6000 Series.
The display can be changed from the menu bar “Project” → “System Settings” → “Display” → “Change Display” in GP-Pro EX.

If you check on [Convert Resolution] when changing the Display Unit type (as shown below), you can adjust both size and location of the part and the text relative to the display resolution automatically. But still, you may need to adjust them manually. Please pay attention to the following points.

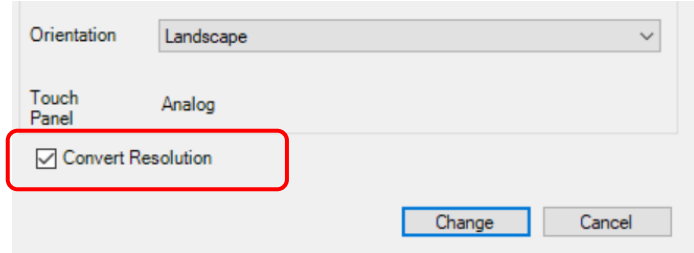

- A function that requires absolute coordinates. Please adjust the settings manually.
  - **Global window**
  - **Position Animation**
- Due to font size and resolution restrictions, manual changes may be required. Please resize them if needed
  - **Font:** In the case of using Standard font, the size will be smaller. You can improve by using Stroke font or Image font.
  - **Objects**
  - **Parts**
  - **Images**
  - **Alarm parts**
- Position may differ from the original project. Please check the coordinate of the window and adjust if needed.
  - **Window display**

© 2026 Pro-face. All Rights Reserved. |

Public

3-1. Replacement Procedure – Transfer screen data to recommended substitute unit (GP-Pro EX)

After turning on the product for the first time, perform the system setup. For the details, refer to **System Settings** section in GP6000 Series System Settings User Guide.

1. Turn on the power of the product.

2. The Create Account screen is displayed. Create an administrator user account for the System Settings. Enter the username and password, then touch the Register button.

NOTE:
- Passwords should be at least 8 digits long and include at least one uppercase letter, one lowercase letter, one number, and one special character.

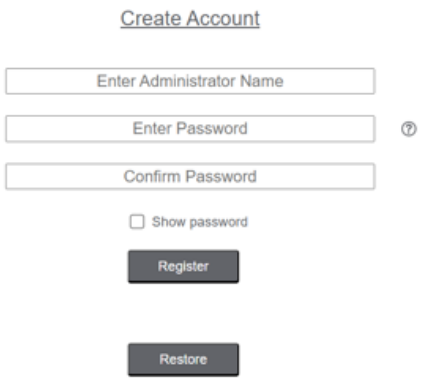

3. The Welcome screen is displayed. Touch System Settings.

4. The Login screen is displayed. Enter the username and the password set earlier, then touch the Login button.

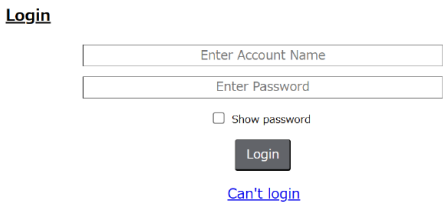

5. The System Settings menu screen is displayed. Select System > Date and Time to set the clock, then touch the Save button.

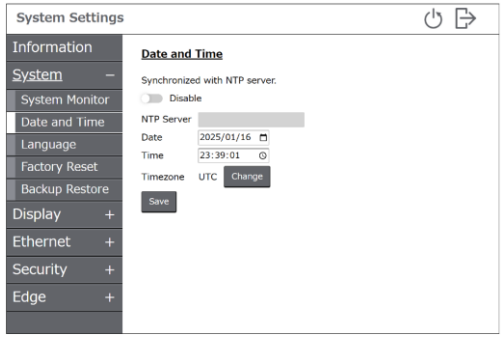

6. From the menu, select Ethernet. Change the network settings as required and touch the Save button.

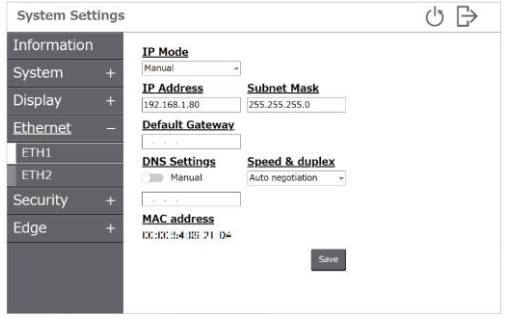

7. Change other settings as required. For information on system settings functions, refer to the system settings user guide.

8. Touch the logout icon at the top right of the screen. The Welcome screen is displayed.

(continue to the next page)

3-1. Replacement Procedure – Transfer screen data to recommended substitute unit (GP-Pro EX)

In this section, we will introduce how to transfer screen data via Ethernet (LAN) as an example.

1. After the initial setup on GP6000 (in the previous page), Welcome screen is displayed.

2. Connect the LAN cable to the display unit to establish the network with the PC installed with GP-Pro EX. (Set up the same network IP address on your PC.)

3. On the GP-Pro EX status bar, click the [Transfer Project] icon and launch the Transfer Tool. Confirm the project details in [Project Information]. To transfer a different project, click the [Select Project] button and choose the appropriate project.

   Click [Transfer Setting] to display the [Transfer Tool] dialog box.

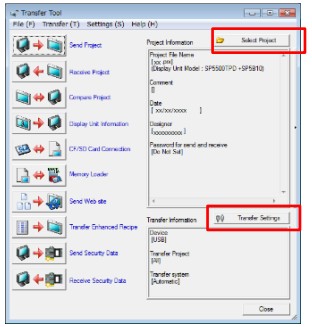

4. Click Ensure that [Communication Port Settings] is set to [LAN]. Select the [LAN Auto Setting] check box and click [OK].

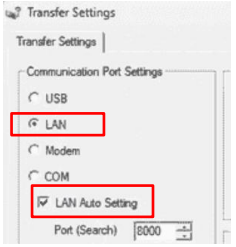

5. Click [Send Project]. The [Select Display Unit] dialog box displays the IP addresses of the display units available on the network.

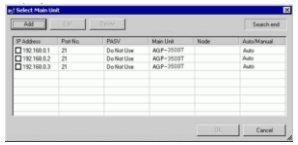

6. Select each IP address of the display unit to which you want to transfer and click [OK]. When multiple IP addresses are checked, the project is sent to multiple display units at once.

7. Set the connection key and click [OK].

   NOTE: If you forget the connection key, you will not be able to connect to the display unit. For more information about connection key, refer to GP-Pro EX reference manual (34.14.4 How the Connection Key Works).

8. When the following dialog box appears, click [Yes].

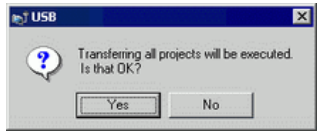

9. The transfer begins. The following dialog box appears during transfer, and you can check the communication status. (The display unit changes to Transferring mode and communication with the device/PLC is suspended.)

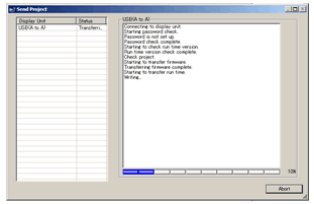

10. When transfer is completed, the state of the dialog box changes from [Transferring] to [Transfer Complete]. Click [Close].

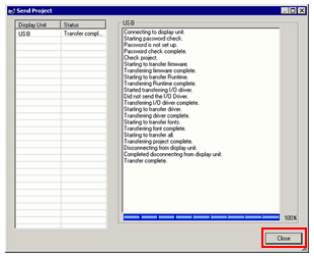

3-2. Software Compatibility – GP-Pro EX Supported Features

There are some differences in supported features between SP5000 Series and GP6000 Series.

For details on supported features, please refer to the “1.5 Supported Features” section in GP-Pro EX Reference Manual.

1.5.1 GP6000 Series

1.5.3 SP5000 Series

© 2026 Pro-face. All Rights Reserved.

Public

3-2. Software Compatibility – Supported Software

Supported Software	SP5000 Series	GP6000 Series Advanced Model	Compatibility of Project Data
GP-Pro EX	✔	✔ Ver. 5.01.000 or later	✔
	https://www.pro-face.com/otasuke/files/manual/gpproex/new/refer/gpproex.htm		
Pro-Server EX	✔	To be supported*1	-
	https://www.pro-face.com/otasuke/files/manual/soft/server_ex/v1_37/ref/SRPreface.htm		
Pro-face Remote HMI (iOS/Android)	✔	✔	✔
	https://www.pro-face.com/otasuke/qa/remotehmi/faq.html		
Pro-face Remote HMI Client for Win	✔	✔	✔
	https://www.proface.com/en/product/soft/remotehmi_client/download		
Pro-face Connect	✔	✔	✔
	https://www.proface.com/en/product/soft/proface_connect/download		

*1 For the latest information, please refer to our Pro-face website (https://www.proface.com).

© 2026 Pro-face. All Rights Reserved. |

Public

Pro-face™

by Schneider Electric

© 2026 Pro-face. All Rights Reserved. |

Public