Specification Comparison of PS6000 1st Gen. vs PS6000 2nd Gen.

2025. Pro-face by Schneider Electric. All Rights Reserved.

General

Pro-face™ by Schneider Electric

Specification Comparison

Spec-up
Difference

Series		PS6000 2nd Gen			PS6000 1st Gen			
Screen	4:3 aspect ratio	12”, 15”	12”, 15”	12”, 15”	12”, 15”			
	16:9 aspect ratio	10”, 12”, 15”, 19”, 22”	12”, 15”, 19”, 22”	12”, 15”, 19”, 22”	12”, 15”, 19”, 22”			
Processor	Model name	Intel® Core™ 3 N355 Twin Lake N355	Intel® Core™ Ultra 5 325	Intel® Core™ Ultra 7 355	Celeron/ Corei 3/ 5 / 7			
	Frequency (Base / Turbo)	1.0 / 3.9 GHz	2.1 / 4.4 GHz	2.3 / 4.6 GHz	2	2.2/3.9	1.6/4.1	1.7 / 4.4 GHZ
	Number of core	8 cores	8 cores (4P / 4LPE)	8 cores (4P / 4LPE)	2	4 (2/4)	8 (4/8)	8 (4/8)
	Graphic	Intel Graphics 32EUs	Intel Graphics 4Xe	Intel Graphics 4Xe	Intel® UHD Graphics			
Memory	Technology	DDR5, SO-DIMM	DDR5, CSO-DIMM	DDR5, CSO-DIMM	DDR4, SO-DIMM			
	Capacity	8GB (Standard), Up to 16GB	16GB (Standard), Up to 32GB	16GB (Standard), Up to 32GB	8 – 32GB			
Video output	Interface	1 x Display port	1 x Display port	1 x Display port	1 x Display port			
Storage	M.2	NVMe SSD, M key, 2242, 256GB up to 512GB	NVMe SSD, M key, 2242, 256GB up to 512GB	NVMe SSD, M key, 2242, 256GB up to 512GB	M.2 SATA 128GB up to 512GB			
	SATA	1 x 2.5" SATA SSD, 256GB up to 512GB	2 x 2.5" SATA SSD, 256GB up to 512GB	2 x 2.5" SATA SSD, 256GB up to 512GB	2 x 2.5" SATA SSD, 256GB up to 512GB (SSD), 1TB (HDD)			
Ethernet	Interface	3 x RJ45	3 x RJ45	3 x RJ45	2 x RJ45			
	Controller	Intel i226-IT	Intel i226-IT	Intel i226-IT	Intel i210-IT			
	Transmission Speed	100/1G/2.5GbE	100/1G/2.5GbE	100/1G/2.5GbE	10/100/1GbE			
USB	Interface	1 x Type-C 2 x USB3.2 2 x USB2.0	1 x Type-C 2 x USB3.2 2 x USB2.0	1 x Type-C 2 x USB3.2 2 x USB2.0	1 x Type-C 2 x USB3.2 2 x USB2.0			
Serial port	Interface	N/A	N/A	N/A	1 x RS-232			
Expansion	Interface	N/A	PCI x1 + PCIe x1 / PCIe x2 / PCI x2	PCI x1 + PCIe x1 / PCIe x2 / PCI x2	PCI x1 + PCIe x1 / PCIe x2 / PCI x2			
	Slot-in option I/F	1, optional • 1x Ethernet (GbE IEEE1588) • 2 x RS-232C Isolated • 2 x RS485 Isolated • 4 x RS-232C	2, optional • 1x Ethernet (GbE IEEE1588) • 2 x RS-232C Isolated • 2 x RS485 Isolated • 4 x RS-232C	2, optional • 1x Ethernet (GbE IEEE1588) • 2 x RS-232C Isolated • 2 x RS485 Isolated • 4 x RS-232C	2, optional • 1x Ethernet (GbE IEEE1588) • 2 x RS-232C Isolated • 2 x RS485 Isolated • 4 x RS-232C			
Power input	AC mode	100Vac - 240Vac	100Vac - 240Vac	100Vac - 240Vac	100Vac - 240Vac			
	DC mode	24Vdc	24Vdc	24Vdc	24Vdc			
Certification	Safety	UL 61010			UL 61010			
	EMC	CE / FCC			CE / FCC			

Interface Comparison

Performance extended

2nd Gen.

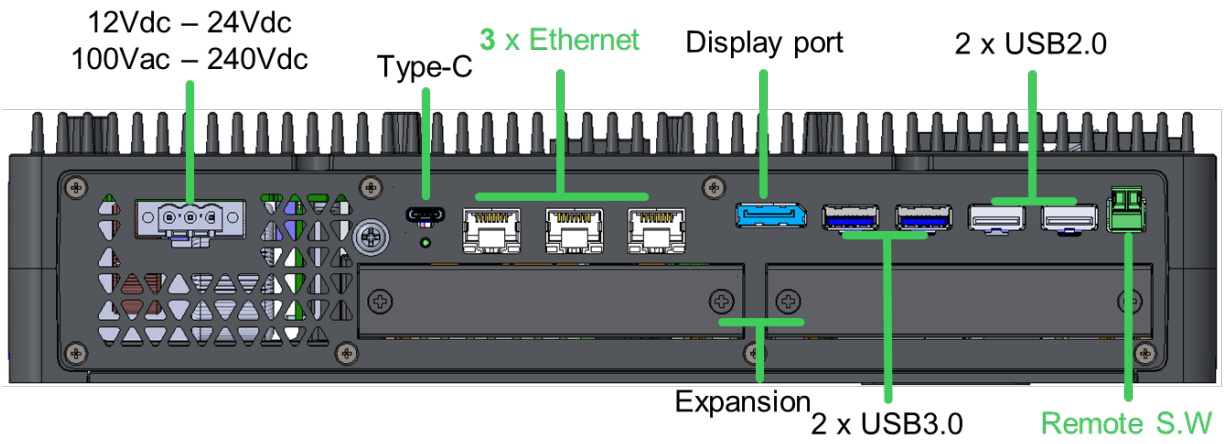

Note: Please select HMIYP6MPR23P2, if RS-232 is required

Performance

2nd Gen.

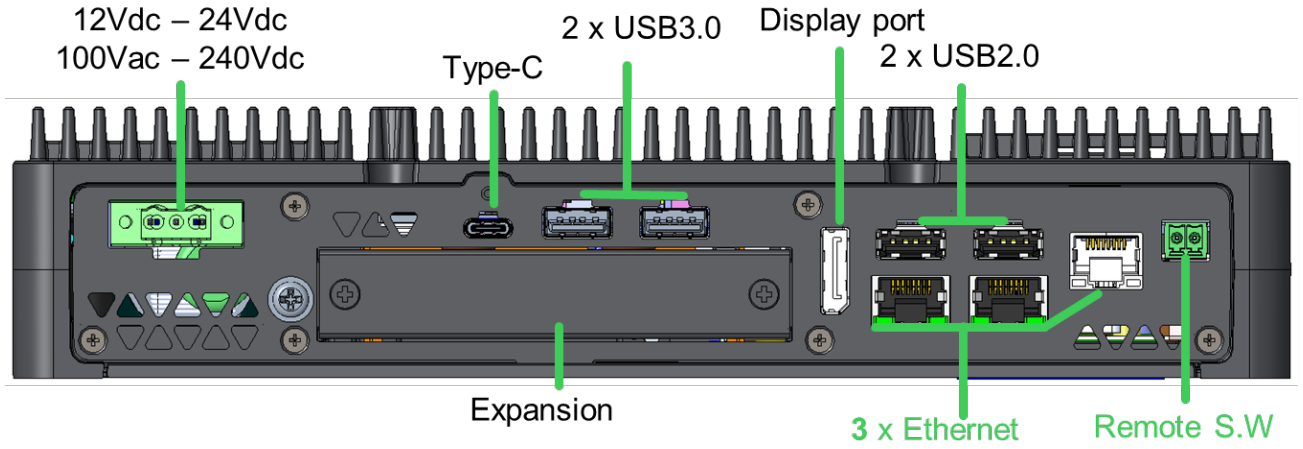

1st Gen.

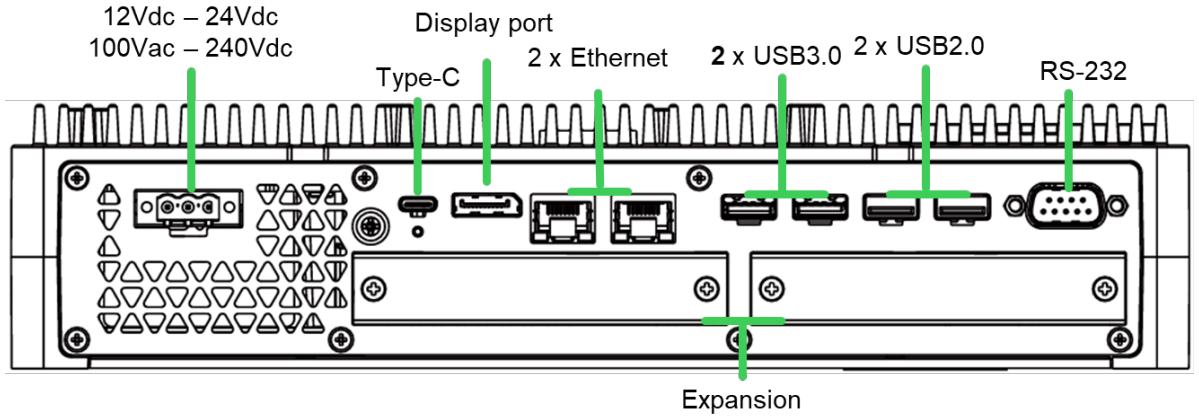

1st Gen.

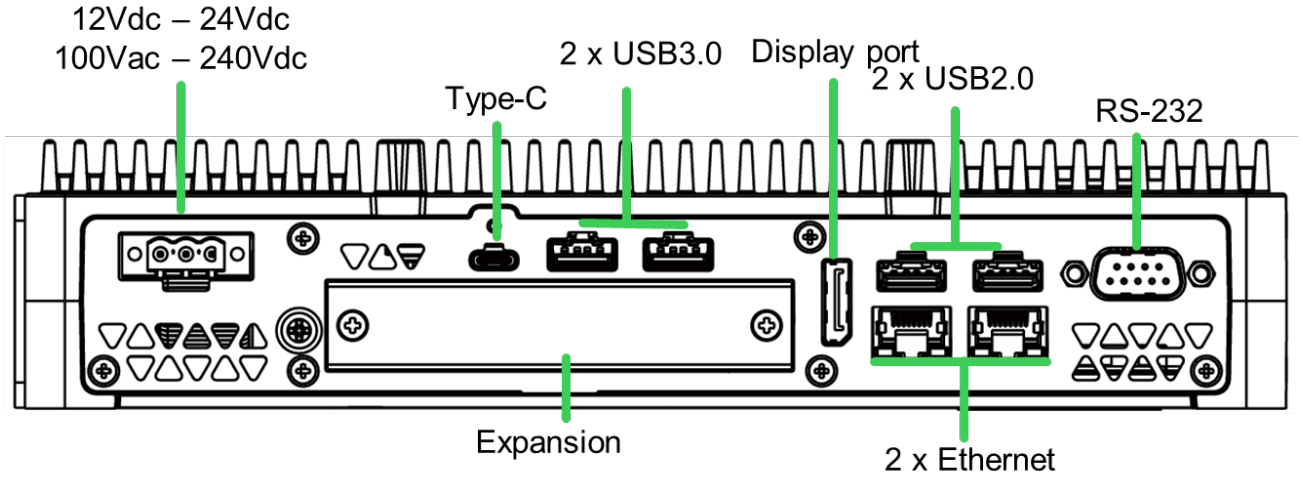

2025. Pro-face by Schneider Electric. All Rights Reserved.

by Schneider Electric

General

Same Dimension of 1st and 2nd Gen.

Performance Extended

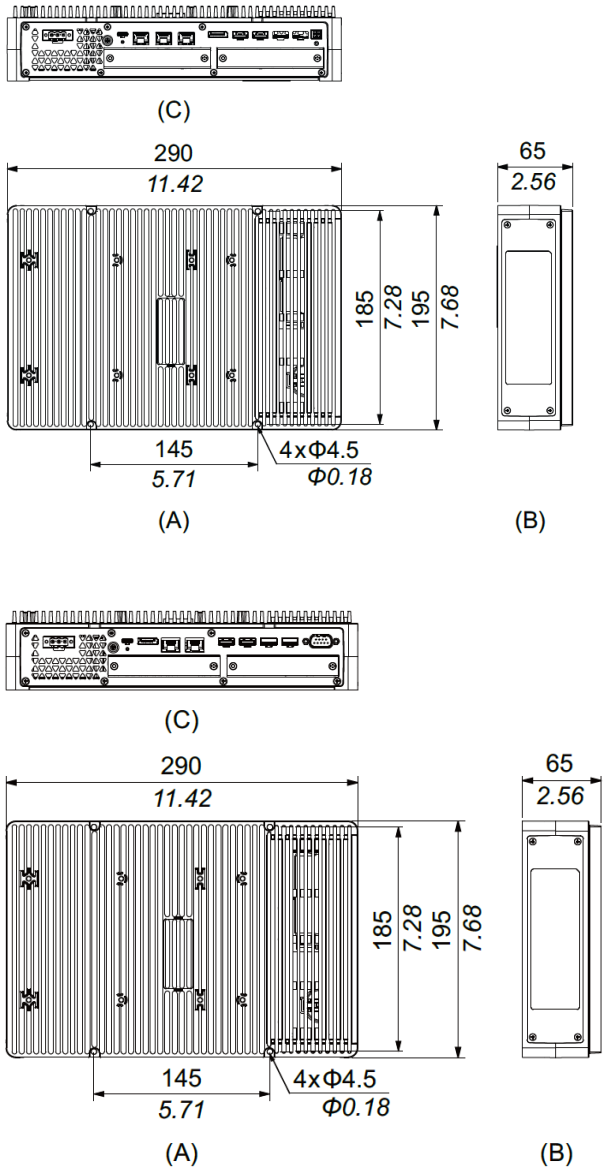

a. Front
b. Left
c. Bottom

Performance

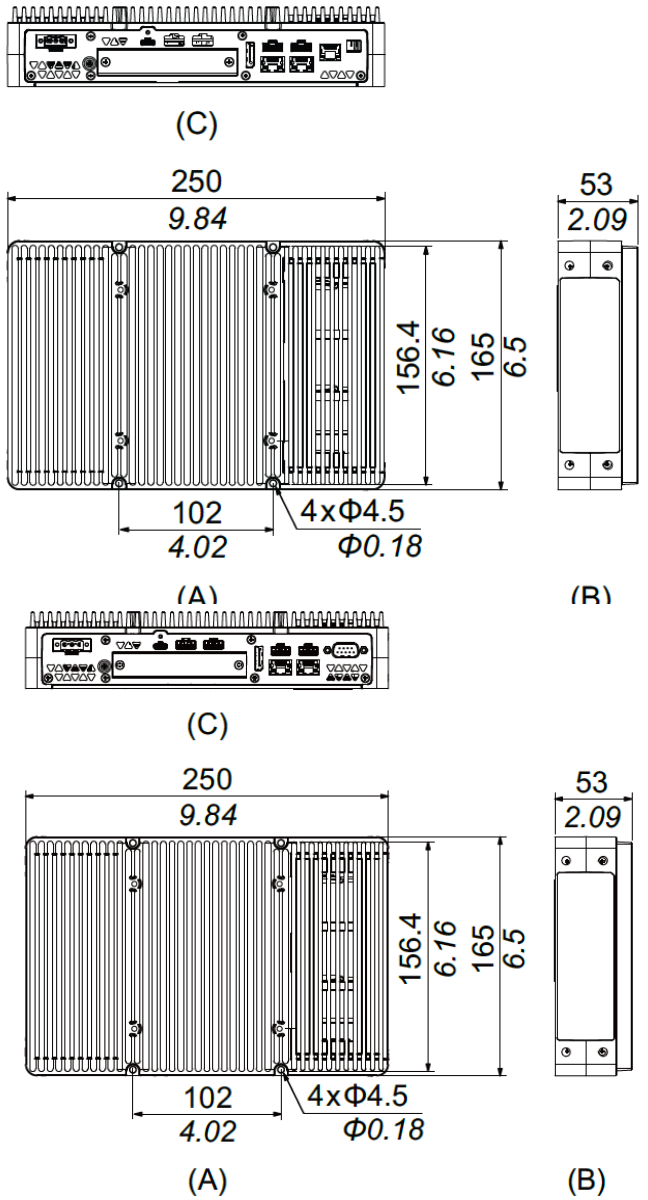

General

Pro-face by Schneider Electric

Same Panel-Cut Dimension of 1st and 2nd Gen.

Model Name		
A	**B**	**C**
12-inch		
301.5 mm (+1/-0 mm) (11.87 in [+0.04/-0 in])	227.5 mm (+1/-0 mm) (8.96 in [+0.04/-0 in])	1.6...5 mm (0.06...0.2 in)
15-inch		
383.5 mm (+1/-0 mm) (15.1 in [+0.04/-0 in])	282.5 mm (+1/-0 mm) (11.12 in [+0.04/-0 in])	1.6...5 mm (0.06...0.2 in)
10-inch Wide		
A	**B**	**C**
255 mm (+1/-0 mm) (10.04 in [+0.04/-0 in])	185 mm (+1/-0 mm) (7.28 in [+0.04/-0 in])	1.6...5 mm (0.06...0.2 in)
12-inch Wide		
295 mm (+1/-0 mm) (11.61 in [+0.04/-0 in])	217 mm (+1/-0 mm) (8.54 in [+0.04/-0 in])	1.6...5 mm (0.06...0.2 in)
15-inch Wide		
394 mm (+1/-0 mm) (15.51 in [+0.04/-0 in])	250 mm (+1/-0 mm) (9.84 in [+0.04/-0 in])	1.6...5 mm (0.06...0.2 in)
19-inch Wide		
449.5 mm (+1/-0 mm) (17.7 in [+0.04/-0 in])	279.5 mm (+1/-0 mm) (11.0 in [+0.04/-0 in])	1.6...5 mm (0.06...0.2 in)
22-inch Wide		
518.5 mm (+1/-0 mm) (20.41 in [+0.04/-0 in])	316.5 mm (+1/-0 mm) (12.46 in [+0.04/-0 in])	1.6...5 mm (0.06...0.2 in)

Based on the panel cut dimensions, open a mount hole on the panel.

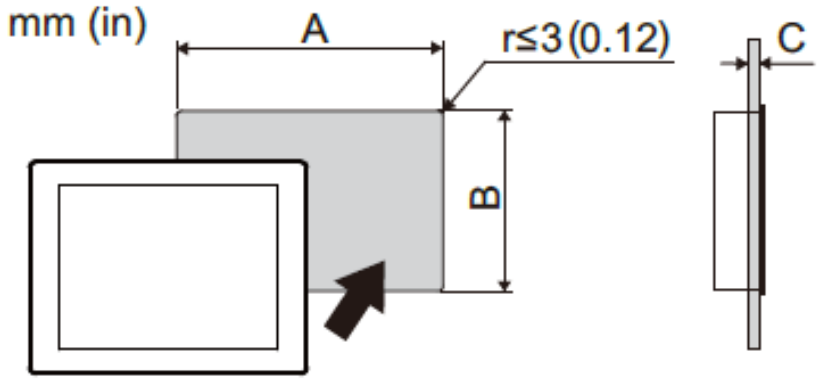

General

Processor, Memory, Storage – PS6000 1st Gen vs PS6000 2nd Gen

Spec-up
Difference

		PS6000 1st Gen	PS6000 2nd Gen	Remark
Processor		Core i7 – 8665UE 4 cores	Core Ultra 7 355 (Panther Lake) 8 cores (4P / 4LPE)	Upgraded to Intel Core Ultra Series 3 silicon
		Core i5 – 8365UE 4 cores	Core Ultra 5 325 (Panther Lake) 8 cores (4P / 4LPE)	
		Core i3 – 8145UE 2 cores	Core 3 N355 (Twin Lake) 8 cores	
		Celeron 4305UE 2 cores	Migrate to Core 3 N355	
Memory	Technology	DDR4, SO-DIMM	DDR5, CSO-DIMM (Core ultra 5/7) / SO-DIMM (Core 3)	Upgraded to DDR5 technology
	Capacity	8 - 32GB (4 - 16GB for Celeron)	Core ultra 5 / 7: 16GB, up to 32GB Core 3 N355: 8GB or 16GB	
Storage	M.2	M.2 SATA 128GB up to 512GB	NVMe SSD, M key, 2242, 256GB up to 512GB	Upgraded to high-speed NVMe SSD
	SATA	2.5” SATA SSD x2 SSD: 256GB up to 512GB HDD: 1TB	2.5" SATA SSD x2 SSD: 256GB up to 512GB HDD: N/A	HDD (1TB) is not supported.

Notes about HDD: HDD (1TB) is not supported with PS6000 2nd Gen. While HDD offered larger storage capacity, most industrial applications do not require extensive local storage, as production data is often stored on servers or network storage systems. Therefore, the PS6000 2nd Generation focuses on SSD technology, providing improved performance, reliability, and durability for industrial environments.

General

Interfaces – PS6000 1st Gen vs PS6000 2nd Gen

Spec-up
Difference

	PS6000 1st Gen	PS6000 2nd Gen	Remark
Serial	RS-232C x1	Available as an option	HMIYP6MPR23P21 (interface option 2x RS-232C Isolated, 2nd Gen) is required to support RS-232C.
USB (Type A)	USB 3.2 (Type A) x2 USB 2.0 (Type A) x2 [12-inch/15-inch display module] USB 2.0 (Type A) x1	Same	
USB (Type C)	USB 3.2 (Type C) x1	Same	The USB (Type C) interface supports alternate mode (DisplayPort)
Ethernet	RJ45 x2 (10/100/1GbE)	RJ45 x3 (100/1G/2.5GbE)	Optimized and Bandwidth upgraded to 2.5GbE
Display Port	Display Port x 1	Same	
PCIe / PCE Expansion Slot	PCI x1 + PCIe x1 or PCIe x2 or PCI x2	Same	
Slot-in Option I/F	2 slots (1 slot for Core i3 model)	2 slots (1 slot for Core 3 model)	

Notes about RS-232C Interface:
If a customer is currently using a Core i3 model and the option interface is already occupied, the RS-232C interface cannot be supported on a Core 3 model. If RS-232C is required, please consider migrating to a Core Ultra 5 model, which provides two option interfaces.

Certifications – PS6000 1st Gen vs PS6000 2nd Gen

Spec-up
Difference

Certifications & Standards	PS6000 1st Gen	PS6000 2nd Gen	Remark
CE	✓	✓	
UKCA	✓	✓	
cULus	✓	✓	
cULus Class 1, Div. 2	✓	PCR	Available via PCR process
ATEX / IECEx	✓ (DC models)	PCR	Available via PCR process
EAC	✓	-	
RCM	✓	✓	
KC	✓	✓	Selected Pro-face brand models
Marine Certifications (DNV, BV)	✓	PCR	Available via PCR process
RoHS for EU	✓	✓	
RoHS for China	✓	✓	
REACH	✓	✓	
WEEE	✓	✓	
CCC / BSMI	N/A	N/A	For industrial applications, these certifications are typically not necessary. They are mainly required for general-purpose PC products.

NOTE about Hazardous Location and Marine certifications:
C1D2/Marine certifications are not supported by default to keep the product competitive.
If a country requires these certifications, please raise a PCR with the business case information.

I/F Expansion Modules – PS6000 1st Gen vs PS6000 2nd Gen

Supported I/F expansion modules for PS6000 2nd Gen are listed below.

Interface expansion module	Module Appearance	Part Number for PS6000 1st Gen	Part Number for PS6000 2nd Gen	Remark
2 x RS-232C Isolated		HMIYP6MPR23P2	HMIYP6MPR23P21	These PS6000 1st Gen options can be used for PS6000 2nd Gen. (These I/F modules are the same product but have different part numbers due to different manufacturing plants.)
4 x RS-232C		HMIYP6MPR23P4	HMIYP6MPR23P41	
2 x RS-485 Isolated		HMIYP6MPR42P2	HMIYP6MPR42P21	
1x Ethernet (GbE IEEE1588)		HMIYP6MPETH	HMIYP6MPETH1	

Note: The other modules such as audio are not supported by the 2nd Gen models.

General

Enhanced Component Availability and Platform Longevity – PS6000 1st Gen vs PS6000 2nd Gen

Key Benefit

Adoption of mainstream DDR5 memory, TLC SSD, and Intel Core Ultra processors improves component availability, reduces obsolescence risk, and enhances long-term platform sustainability.

		PS6000 1st Gen	PS6000 2nd Gen	Remark
Memory	Technology	DDR4	DDR5	**Mainstream DDR5 memory technology**
Storage	M.2	M.2 SATA SSD (MLC)	NVMe SSD (TLC)	**Mainstream NVMe SSD and TLC SSD technologies**
	SATA	2.5” SATA SSD (MLC) HDD	2.5" SATA SSD (TLC) HDD: Transitioned to TLC SSD architecture	

Platform Longevity

PS6000 2nd Gen delivers a platform optimized for the latest Windows 11 and security environment.

Series	PS6000 1st Gen	PS6000 2nd Gen	Remark
Processor	Core i7	Core Ultra 7	**Intel Core Ultra Series 3**
	Core i5	Core Ultra 5	
	Core i3	Core 3	
	Celeron	Core 3	

General